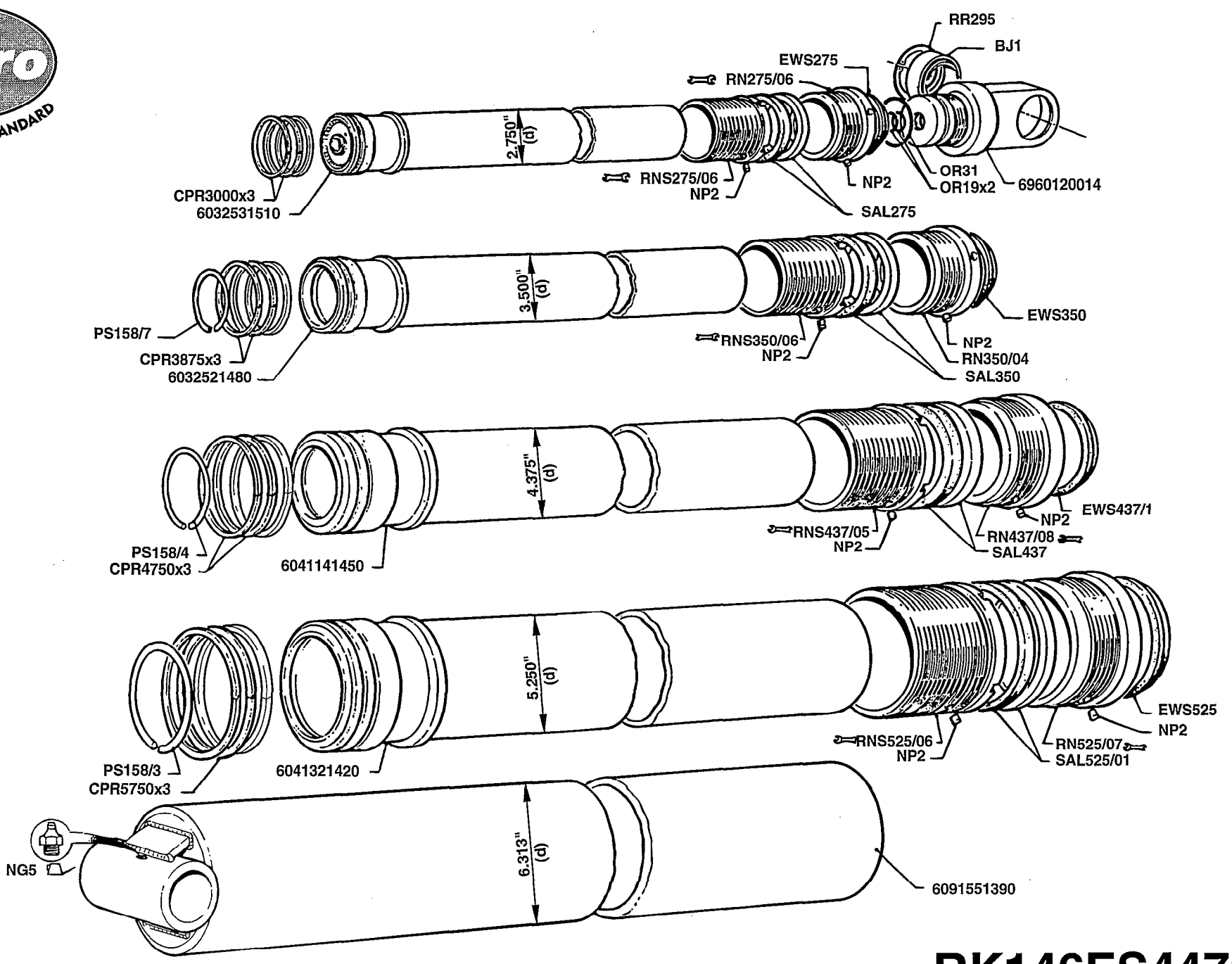

RK146ES44736001