Edbro

Member of JOST-World

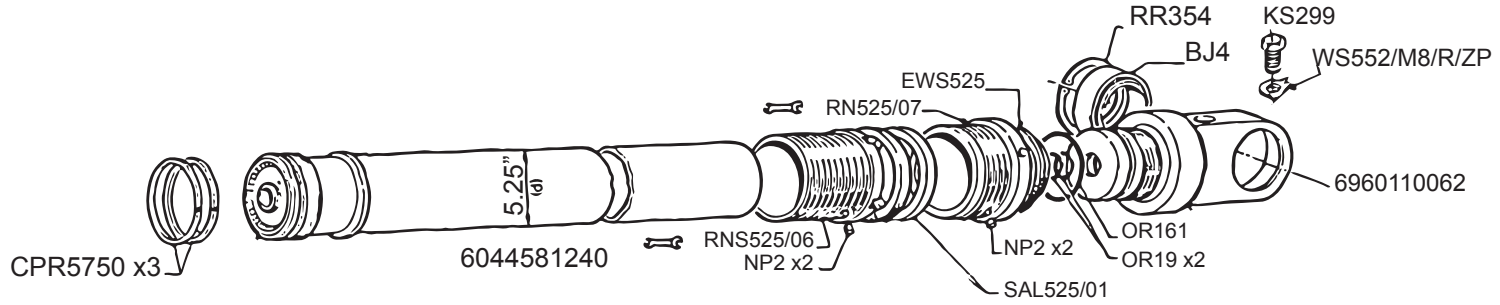

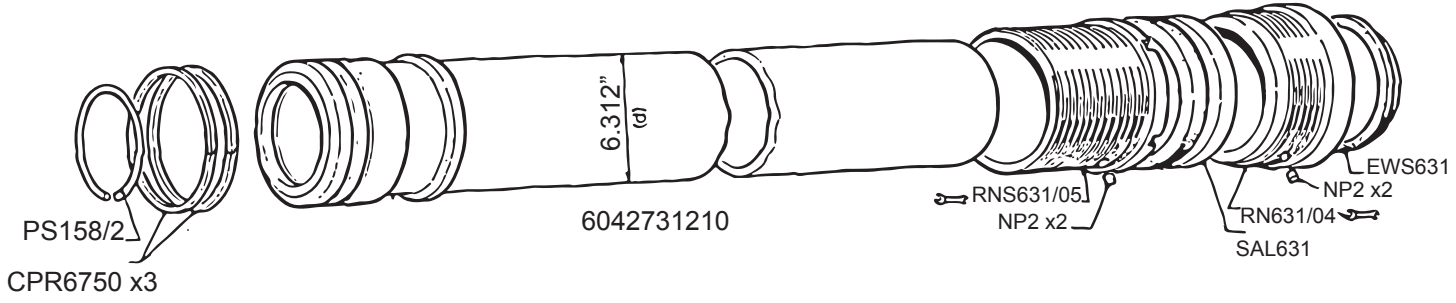

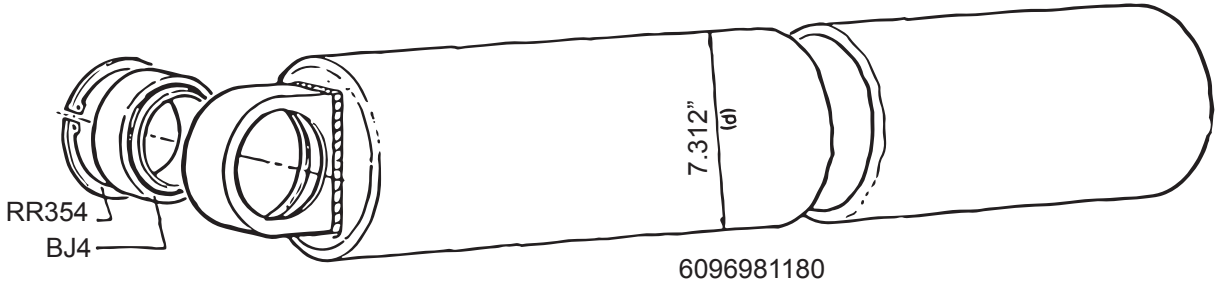

April 2015

RK171SS201876003