Edbro

BOLTON - ENGLAND

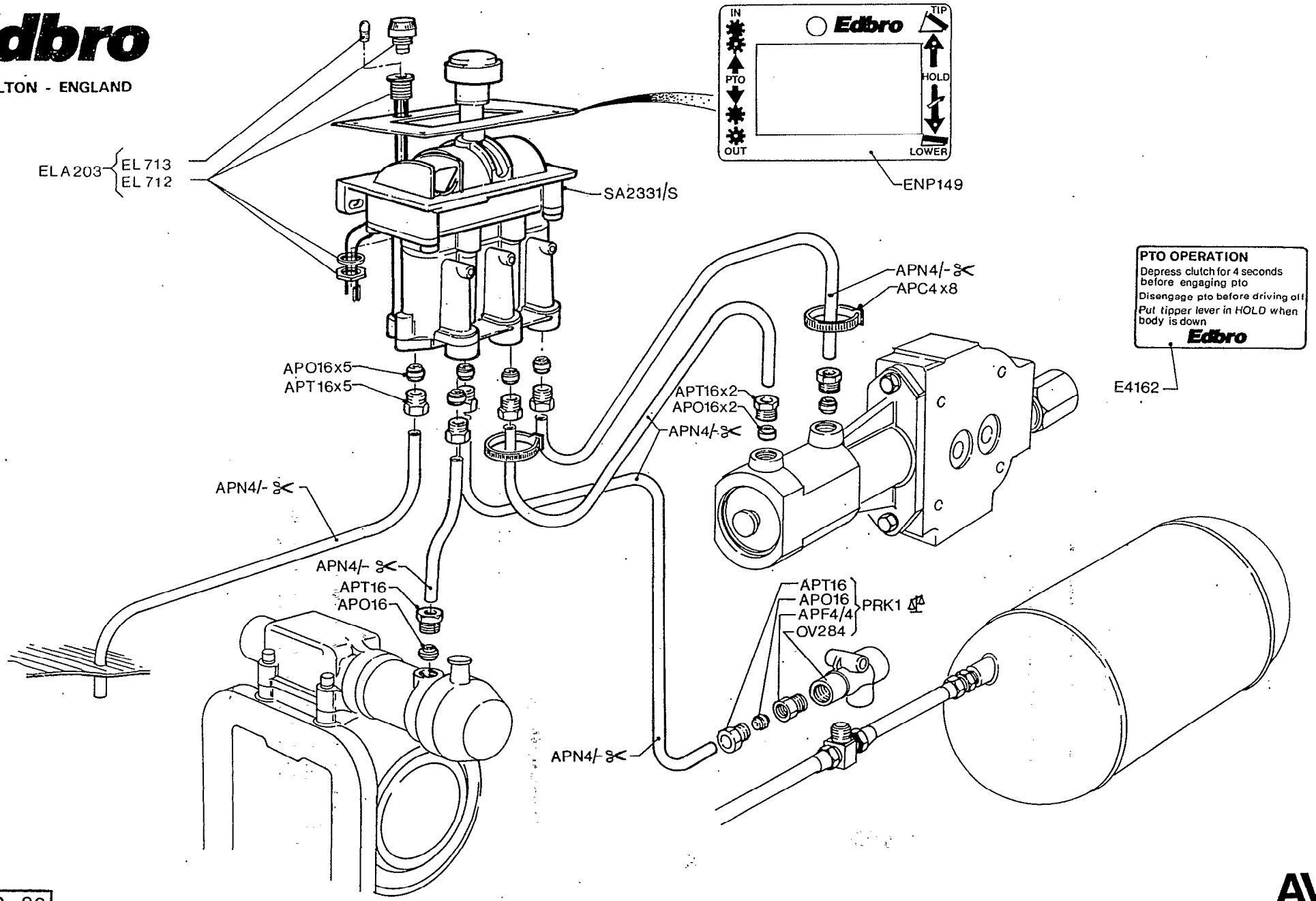

EDBRO-90

AV66