Cylinder 4 stage front end with plain eye

CS110E41895M19A01C

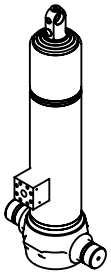

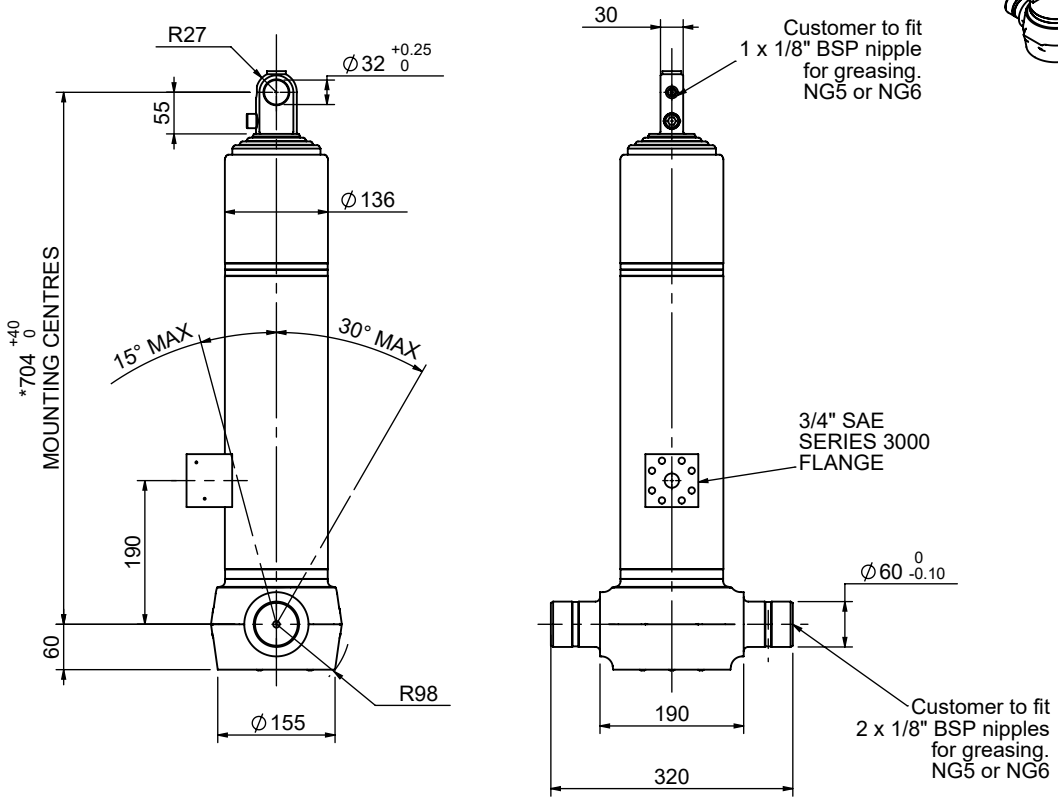

***Includes 7mm Pull Out.**
All Stages Chrome Plated.

SPECIFICATION

Stage	Diameter	Length	Stroke	Swept Volume
-	-	-	-	-
-	-	-	-	-
0	136	681	-	-
1	117	646	461	5.0
2	98	646	473	3.6
3	79	646	478	2.3
4	63	646	483	1.5
		Total (+5/-10)	1895	12.4
Final stroke reduced by	0	Priming Volume		4.3
Cylinder Mass (Kg)	58	Total Volume (Litres)		16.7
Maximum Pressure (Bar)	190	Max. first stage thrust		130 KN

ADDTIONAL INFORMATION

NOTES:

MOUNTED CENTRES OF 704mm GIVES A STROKE OF 1895mm

For guidance only;
Higher working pressures and tipping capacities may be possible.
To check your application email - applications@edbro.co.uk

NOTES

1. This cylinder is for lifting purposes only and side load conditions should be avoided
2. Cylinder is painted in primer paint to RAL5013
3. Refer to www.edbro.com for;-
   - Bracket details
   - Installation instructions that must be observed
   - Correct oil selection
   - An explanation of tipping capacity

JOST UK Ltd
Edbro House, Nelson Street, Bolton, England, BL3 2JJ
Tel +44 (0) 1204 528888 Fax +44 (0) 1204 531957
Email: sales@jost-world.com Web: www.edbro.com

Technical Specifications are subject to change without notice

Date Created/Updated: 27 Nov 2019
Refer www.edbro.com to confirm latest specification
All dimensions are in 'mm', unless otherwise stated

Cylinder Outline Drawing

CS110E41895M19A01C

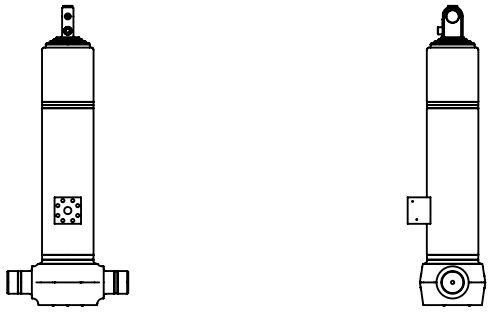

CS110E41895M19A01C

Edbro
SETTING THE INDUSTRY STANDARD

Edbro plc
Nelson Street, Bolton, Lancashire BL3 2JJ UK
Tel +44 (0) 1204 528888 Fax +44 (0) 1204 531957
Email: postmaster@edbro.com Web: www.edbro.com

Technical Specifications are subject to change without notice

Date Created/Updated: 28 November 2019

Scale: 1:20