Cylinder 5 stage front end with Outer Cover

CS150056527B19F21C

****ALLOW 50mm TO REMOVE CAP FOR SERVICING**

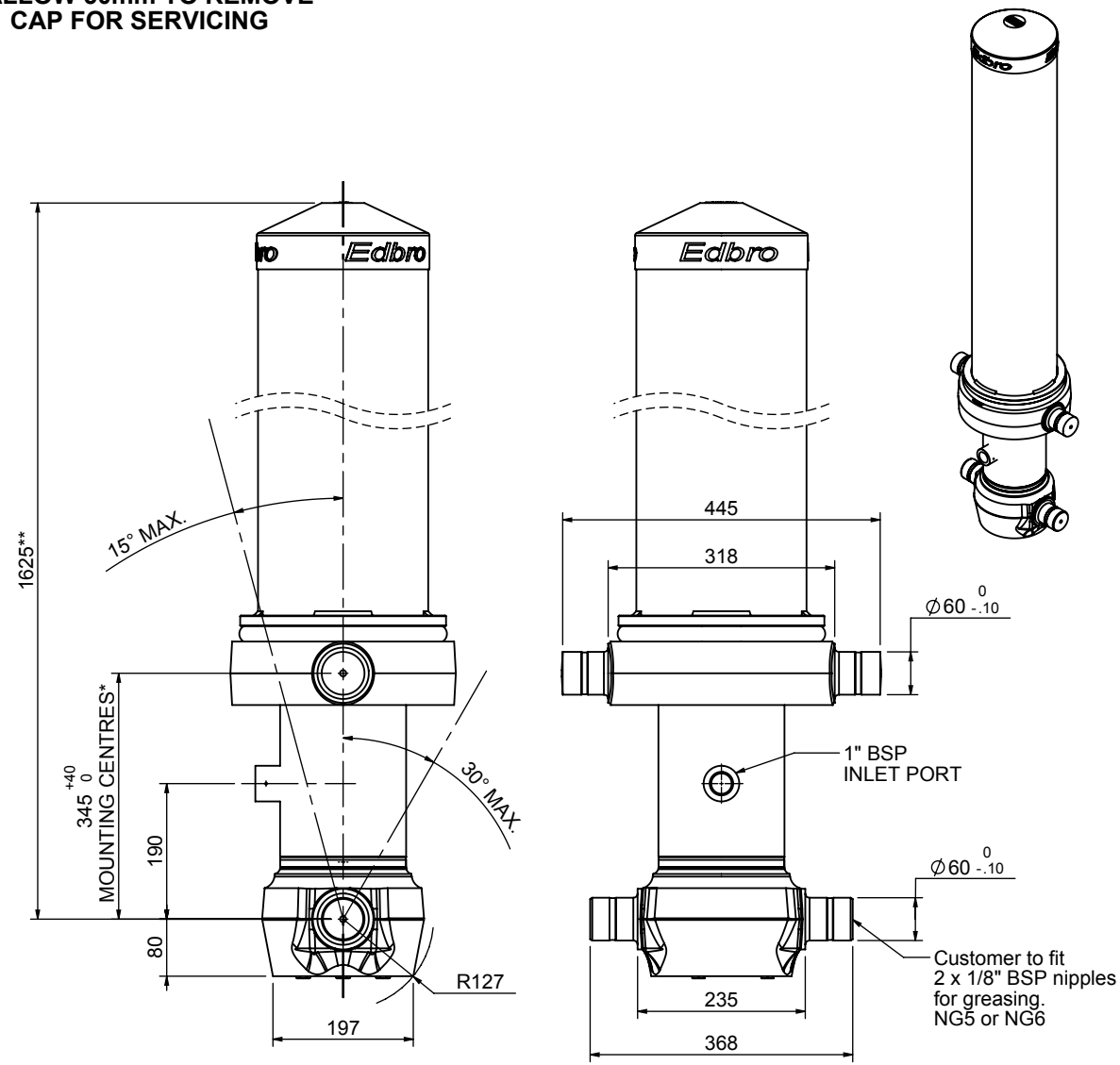

***Include 11mm Pull Out**
All Stages Chrome Plated

SPECIFICATION — RATED CAPACITY : 25-34 TONNES***

Stage	Diameter	Length	Stroke	Swept Volume
OUTER COVER	239	1245	-	-
0	177	1575	-	-
1	155	1540	1325	25
2	136	1540	1347	20
3	117	1540	1362	15
4	98	1540	1367	10
5	79	1560	1164	6
Final stroke reduced by	208	Total (+5/-10)	6565	76
Cylinder Mass (Kg)	249.59	Priming Volume		15.2
Rated Pressure (Bar)	175	Total Volume (Litres)		91.2
Maximum Pressure (Bar)	175	Max. first stage thrust		230 KN

***TIPPING CAPACITY AT RATED PRESSURE

d = 229 ; r = 750

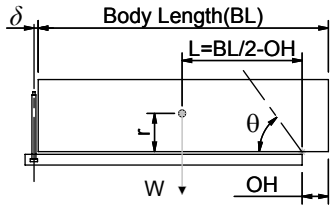

BODY LENGTH (BL)						OH
8000		8500		9000		
27	48°	26	45°	25	42°	150
30	50°	28	47°	26	44°	450
34	52°	31	48°	29	45°	750

Tipping angle (θ)
Body + payload mass,W (tonne)

For guidance only;
Higher Rated Pressures may be possible. To check your application, email Edbro plc at <applications@edbro.co.uk>

NOTES

- If hydraulic pressure is used to limit overloading, the system relief valve must be set to the Rated Pressure unless agreed otherwise by Edbro
- The system relief valve can be set to Maximum Pressure if the load is limited by other means.See RATINGS page for advice
- This cylinder is for lifting purposes only and sideload conditions must be avoided
- Cylinder is painted in primer paint to RAL5013
- See bracket options page BRKT01, BRKT02
- See installation instructions INSTALL01
- Use oil according to specification OIL01

Edbro
SETTING THE INDUSTRY STANDARD

Edbro plc
Nelson Street, Bolton, Lancashire BL3 2JJ UK
Tel +44 (0) 1204 528888 Fax +44 (0) 1204 531957
Email: postmaster@edbro.com Web: www.edbro.com

Technical Specifications are subject to change without notice
Date Created/Updated: 19 November 2009 15:55:44
Refer www.edbro.com to confirm latest specification
All dimensions are in 'mm', unless otherwise stated