Cylinder 5 stage front end with Outer Cover

CS170057233N25A16

****ALLOW 50mm TO REMOVE CAP FOR SERVICING**

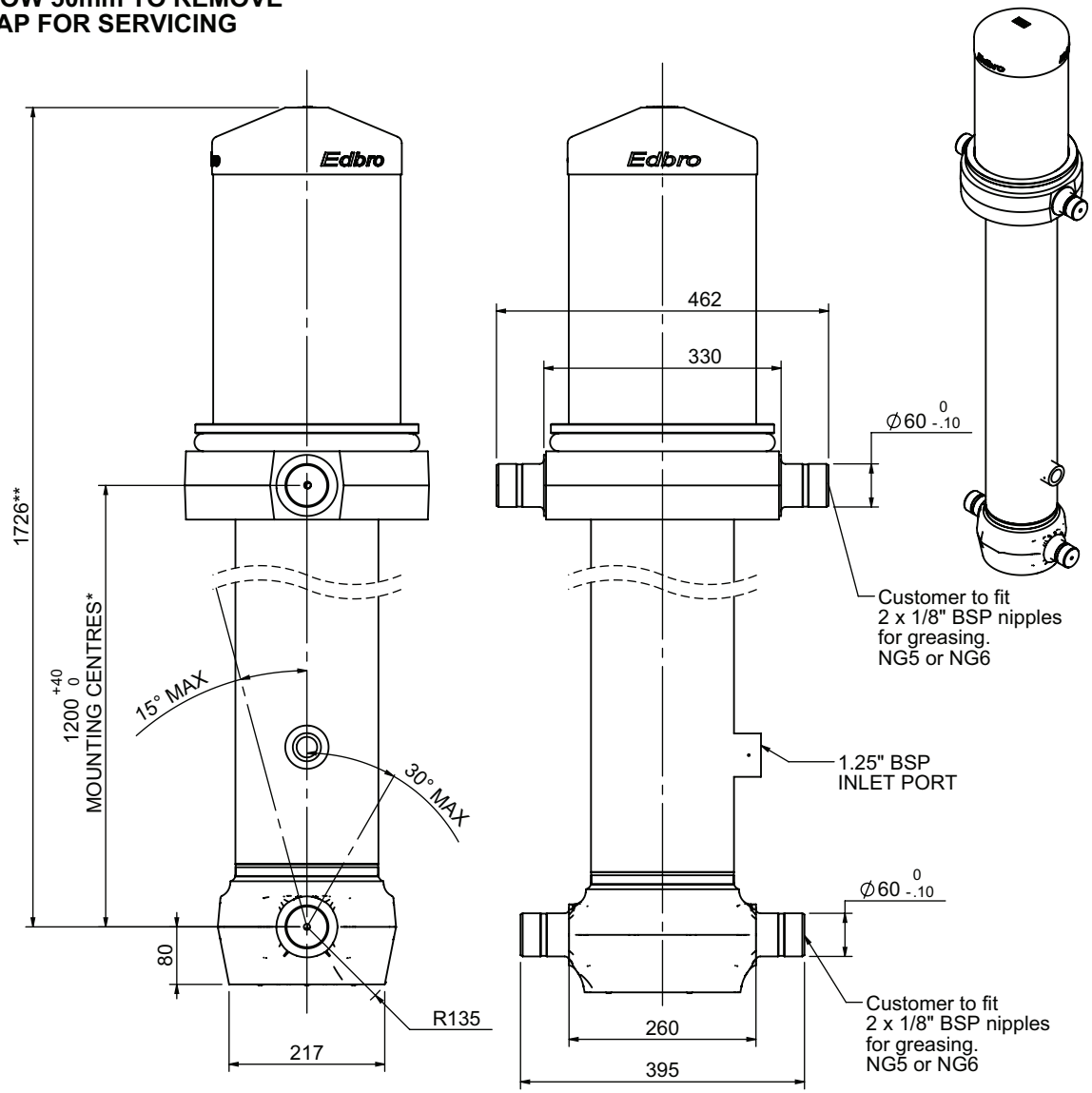

***Includes 12mm Pull Out**

SPECIFICATION — RATED CAPACITY : 29-40 TONNES***

Stage	Diameter	Length	Stroke	Swept Volume
OUTER COVER	261	490	-	-
0	199	1675	-	-
1	176	1640	1414	34
2	155	1640	1437	27
3	136	1640	1447	21
4	117	1640	1462	16
5	98	1640	1467	11
Final stroke reduced by	0	Total (+5/-10)	7227	109
Cylinder Mass (Kg)	299.12	Priming Volume		22
Rated Pressure (Bar)	135	Total Volume (Litres)		131
Maximum Pressure (Bar)	175	Max. first stage thrust		260 KN

***TIPPING CAPACITY AT RATED PRESSURE

d = 229 ; r = 900

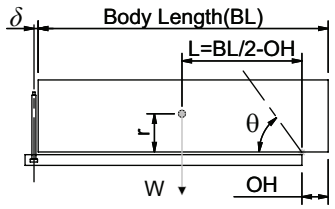

BODY LENGTH (BL)						OH
8500		9000		9500		
33	51°	31	48°	29	45°	150
36	53°	33	49°	31	46°	450
40	55°	36	51°	34	48°	750

Tipping angle (θ)

Body + payload mass,W (tonne)

For guidance only;
Higher Rated Pressures may be possible. To check your application, email Edbro plc at <applications@edbro.co.uk>

NOTES

- If hydraulic pressure is used to limit overloading, the system relief valve must be set to the Rated Pressure unless agreed otherwise by Edbro
- The system relief valve can be set to Maximum Pressure if the load is limited by other means.See RATINGS page for advice
- This cylinder is for lifting purposes only and sideload conditions must be avoided
- Cylinder is painted in primer paint to RAL5013
- See bracket options page BRKT01, BRKT02
- See installation instructions INSTALL01
- Use oil according to specification OIL01

Edbro
SETTING THE INDUSTRY STANDARD

Edbro plc
Nelson Street, Bolton, Lancashire BL3 2JJ UK
Tel +44 (0) 1204 528888 Fax +44 (0) 1204 531957
Email: postmaster@edbro.com Web: www.edbro.com

Technical Specifications are subject to change without notice
Date Created/Updated: 11 August 2011 14:31:27
Refer www.edbro.com to confirm latest specification
All dimensions are in 'mm', unless otherwise stated