Cylinder 5 stage front end with Outer Cover

CS170058983S19L12C

****ALLOW 50mm TO REMOVE CAP FOR SERVICING**

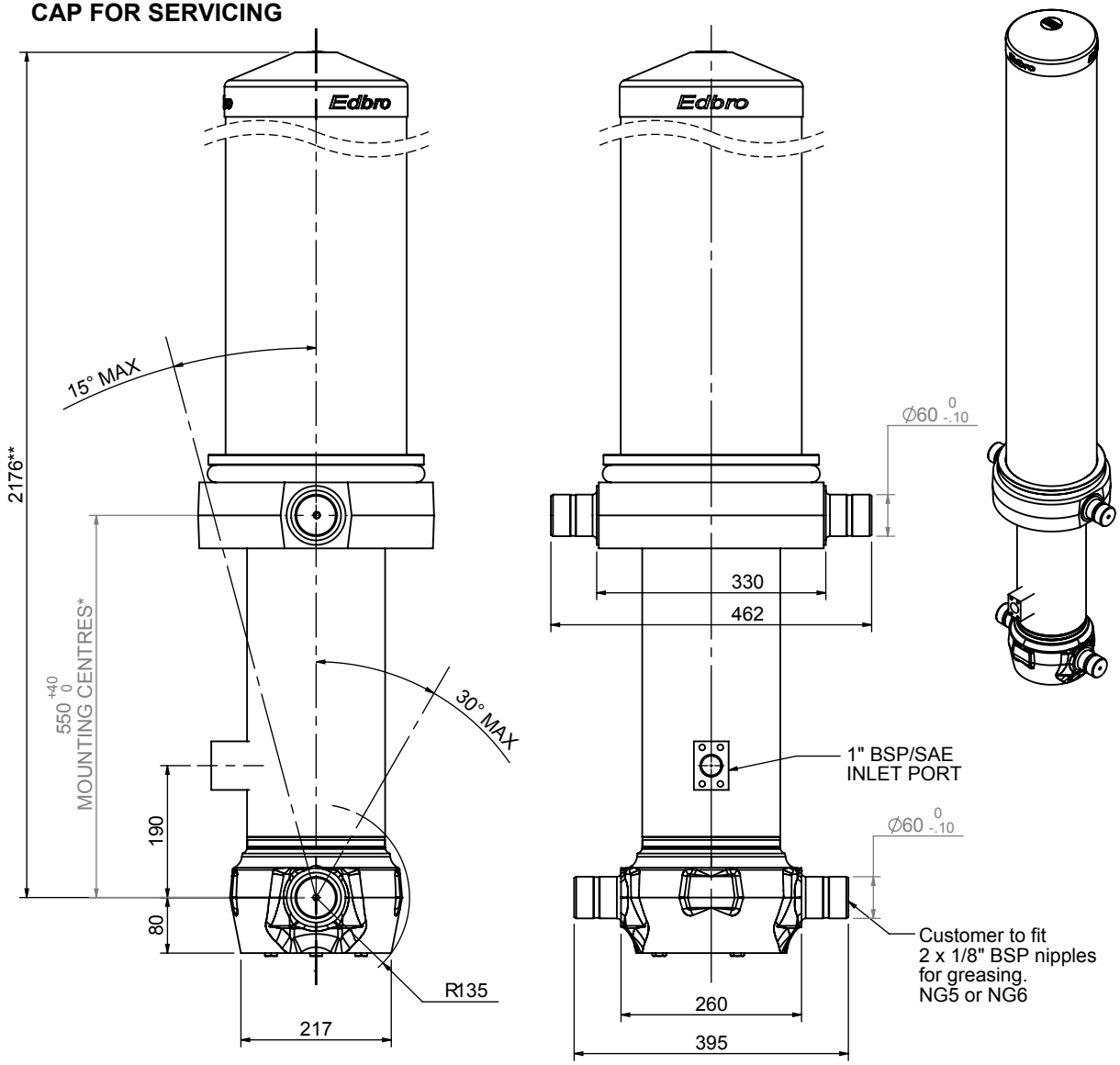

***Includes 12mm Pull Out**
All Stages Chrome Plated

SPECIFICATION			RATED CAPACITY : 24-29 TONNES***	
Stage	Diameter	Length	Stroke	Swept Volume
OUTER COVER	261	1590	-	-
0	199	2125	-	-
1	176	2090	1864	45
2	155	2090	1887	36
3	136	2090	1897	28
4	117	2090	1912	21
5	98	2090	1417	11
Final stroke reduced by	500	Total (+5/-10)	8977	141
Cylinder Mass (Kg)	392.16	Priming Volume		27
Rated Pressure (Bar)	110	Total Volume (Litres)		168
Maximum Pressure (Bar)	175	Max. first stage thrust		260 KN

***TIPPING CAPACITY AT RATED PRESSURE

d = 229 ; r = 900

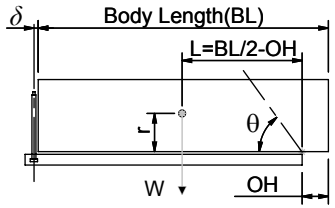

BODY LENGTH (BL)						OH
11000		11500		12000		
25	48°	24	46°			150
27	50°	26	47°	25	45°	450
29	51°	27	49°	26	46°	750

Tipping angle (θ)
Body + payload mass,W (tonne)

For guidance only;
Higher Rated Pressures may be possible. To check your application, email Edbro plc at <applications@edbro.co.uk>

NOTES

- If hydraulic pressure is used to limit overloading, the system relief valve must be set to the Rated Pressure unless agreed otherwise by Edbro
- The system relief valve can be set to Maximum Pressure if the load is limited by other means.See RATINGS page for advice
- This cylinder is for lifting purposes only and sideload conditions must be avoided
- Cylinder is painted in primer paint to RAL5013
- See bracket options page BRKT01, BRKT02
- See installation instructions INSTALL01
- Use oil according to specification OIL01

Edbro
SETTING THE INDUSTRY STANDARD

Edbro plc
Nelson Street, Bolton, Lancashire BL3 2JJ UK
Tel +44 (0) 1204 528888 Fax +44 (0) 1204 531957
Email: postmaster@edbro.com Web: www.edbro.com

Technical Specifications are subject to change without notice

Date Created/Updated: 01 September 2009 11:23:06

Refer www.edbro.com to confirm latest specification
All dimensions are in 'mm', unless otherwise stated