Cylinder 5 stage front end with outer cover

CS17L058233S19A11

**ALLOW 50mm TO REMOVE CAP FOR SERVICING

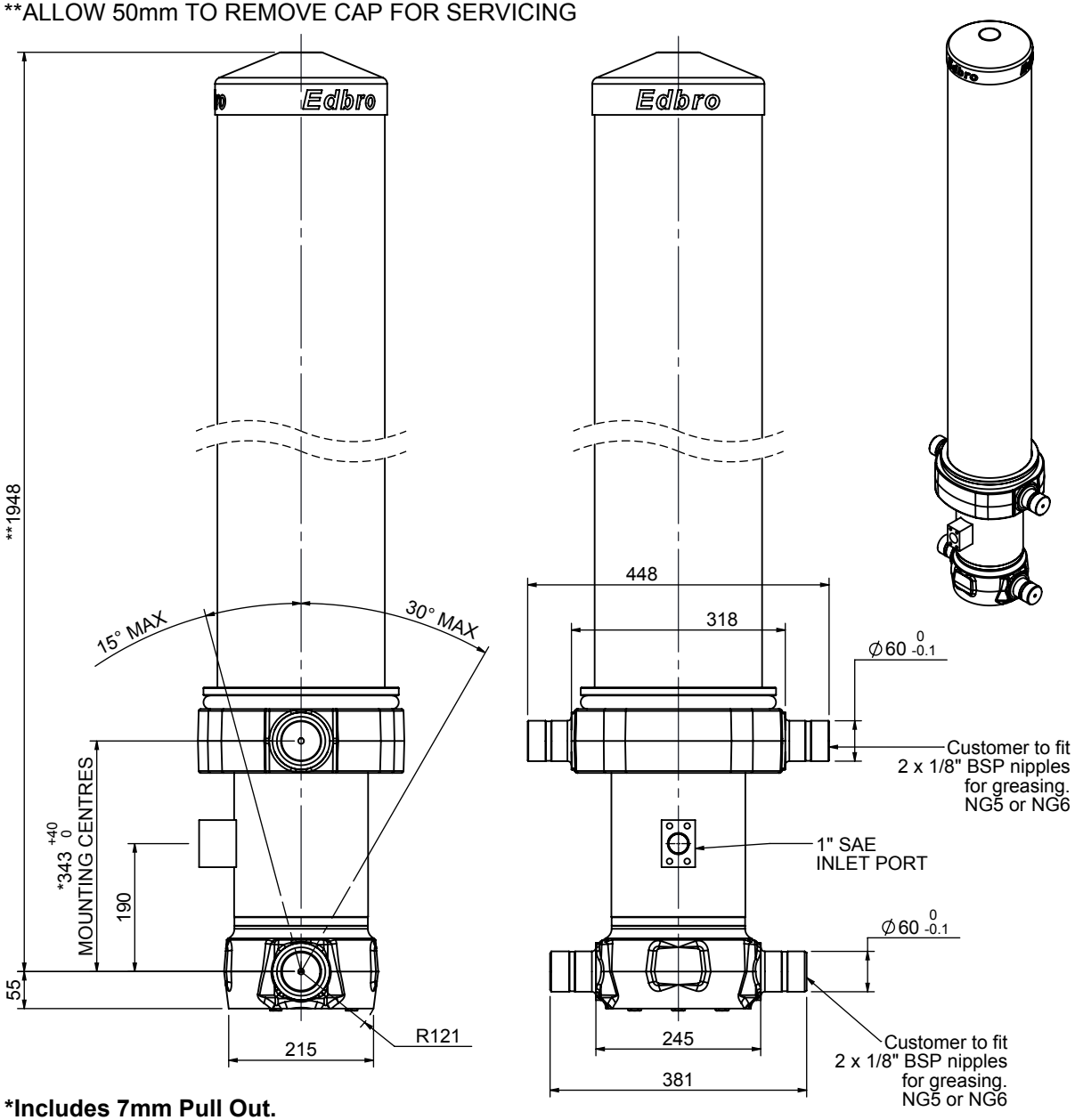

***Includes 7mm Pull Out.**

SPECIFICATION		TIPPING CAPACITY : 33-43 TONNES***		
Stage	Diameter	Length	Stroke	Swept Volume
OUTER COVER	248	1570	-	-
0	199	1875	-	-
1	176	1840	1620	39
2	155	1840	1637	31
3	136	1840	1647	24
4	117	1840	1662	18
5	98	1840	1667	13
		Total (+5/-10)	8233	125
Final stroke reduced by	0	Priming Volume		25.3
Cylinder Mass (Kg)	336	Total Volume (Litres)		150.3
Maximum Pressure (Bar)	190	Max. first stage thrust		200 KN

***TIPPING CAPACITY AT WORKING PRESSURE

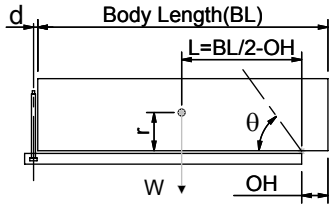

BODY LENGTH (BL)						OH
10000		10500		11000		
34	48°	33	46°	32	44°	150
37	50°	35	47°	33	45°	450
40	52°	37	49°	35	46°	750

Tipping angle (θ)

Body + payload mass,W (tonne)

d = 229; r = 900; Working Pressure 150 bar

For guidance only;
Higher working pressures and tipping capacities may be possible.
To check your application email - applications@edbro.co.uk

NOTES

1. This cylinder is for lifting purposes only and side load conditions should be avoided
2. Cylinder is painted in primer paint to RAL5013
3. Refer to www.edbro.com for;-
   - Bracket details
   - Installation instructions that must be observed
   - Correct oil selection
   - An explanation of tipping capacity

Edbro
SETTING THE INDUSTRY STANDARD

Edbro plc
Nelson Street, Bolton, England, BL3 2JJ
Tel +44 (0) 1204 528888 Fax +44 (0) 1204 531957
Email: postmaster@edbro.com Web: www.edbro.com

Technical Specifications are subject to change without notice
Date Created/Updated: 07 November 2014
Refer www.edbro.com to confirm latest specification
All dimensions are in 'mm', unless otherwise stated

Cylinder Outline Drawing

CS17L058233S19A11

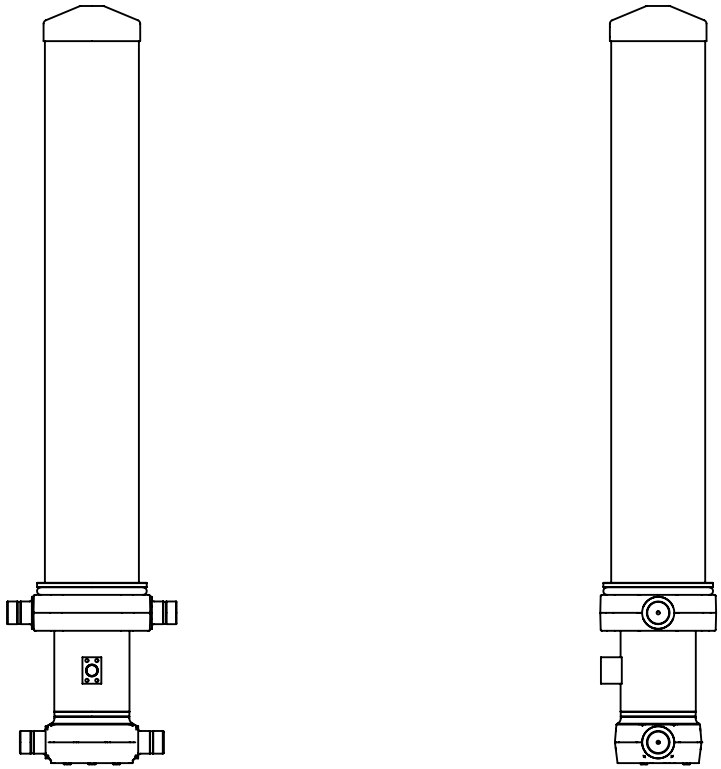

CS17L058233S19A11

Edbro plc
Nelson Street, Bolton, Lancashire BL3 2JJ UK
Tel +44 (0) 1204 528888 Fax +44 (0) 1204 531957
Email: postmaster@edbro.com Web: www.edbro.com

SETTING THE INDUSTRY STANDARD

Technical Specifications are subject to change without notice

Date Created/Updated: 07 November 2014

Scale: 1:20