Cylinder 5 stage front end with outer cover

CS17L058233S19A11D

**ALLOW 50mm TO REMOVE CAP FOR SERVICING

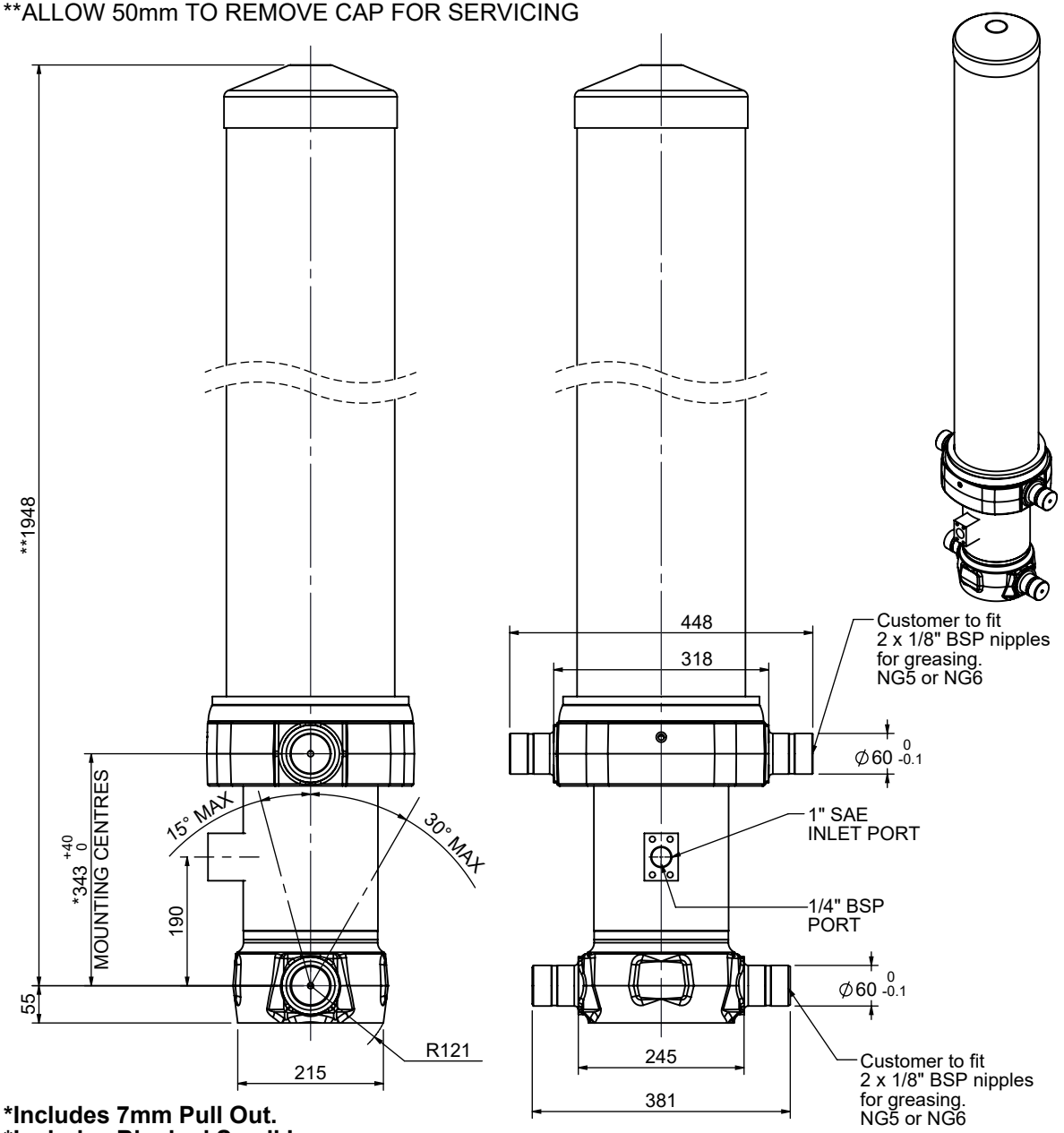

***Includes 7mm Pull Out.**
***Includes Blocked Small Inner.**

SPECIFICATION — TIPPING CAPACITY : 31-39 TONNES***

Stage	Diameter	Length	Stroke	Swept Volume
OUTER COVER	248	1570	-	-
0	199	1875	-	-
1	176	1840	1620	39
2	155	1840	1637	31
3	136	1840	1647	24
4	117	1840	1662	18
5	98	1840	1667	13
		Total (+5/-10)	8233	125
Final stroke reduced by	0	Priming Volume		16.3
Cylinder Mass (Kg)	337	Total Volume (Litres)		141.3
Maximum Pressure (Bar)	190	Max. first stage thrust		200 KN

***TIPPING CAPACITY AT WORKING PRESSURE

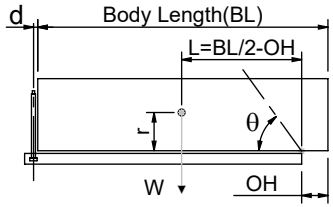

BODY LENGTH (BL)						OH
10000		10500		11000		
34	48°	32	46°	31	44°	150
36	50°	34	47°	33	45°	450
39	52°	37	49°	35	46°	750

Tipping angle (θ)
Body + payload mass,W (tonne)

d = 229; r = 900; Working Pressure 148 bar

For guidance only;
Higher working pressures and tipping capacities may be possible.
To check your application email - applications@edbro.co.uk

NOTES

1. This cylinder is for lifting purposes only and side load conditions should be avoided
2. Cylinder is painted in primer paint to RAL5013
3. Refer to www.edbro.com for;-
   - Bracket details
   - Installation instructions that must be observed
   - Correct oil selection
   - An explanation of tipping capacity

JOST UK Ltd
Edbro House, Nelson Street, Bolton, England, BL3 2JJ
Tel +44 (0) 1204 528888 Fax +44 (0) 1204 531957
Email: sales@jost-world.com Web: www.edbro.com

Technical Specifications are subject to change without notice
Date Created/Updated: 20 November 2019
Refer www.edbro.com to confirm latest specification
All dimensions are in 'mm', unless otherwise stated