Cylinder 5 stage front end with outer cover

CS17L058233S19L12C

**ALLOW 50mm TO REMOVE CAP FOR SERVICING

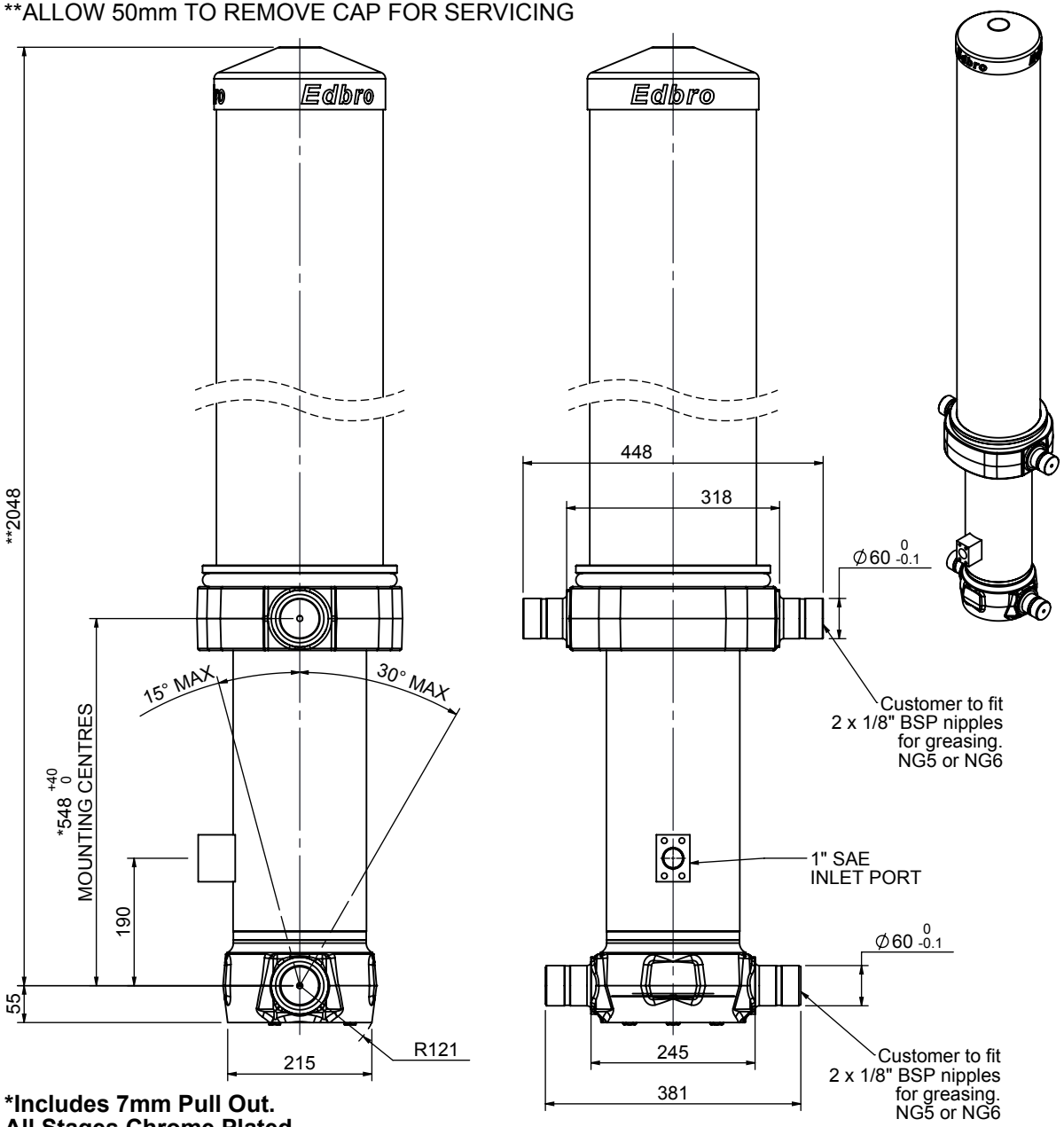

***Includes 7mm Pull Out.**
All Stages Chrome Plated

SPECIFICATION		TIPPING CAPACITY : 34-45 TONNES***		
Stage	Diameter	Length	Stroke	Swept Volume
OUTER COVER	248	1465	-	-
0	199	1975	-	-
1	176	1940	1720	42
2	155	1940	1737	33
3	136	1940	1747	25
4	117	1940	1762	19
5	98	1940	1267	10
		Total (+5/-10)	8233	129
Final stroke reduced by	500	Priming Volume		26.8
Cylinder Mass (Kg)	346	Total Volume (Litres)		155.8
Maximum Pressure (Bar)	190	Max. first stage thrust		200 KN

***TIPPING CAPACITY AT WORKING PRESSURE

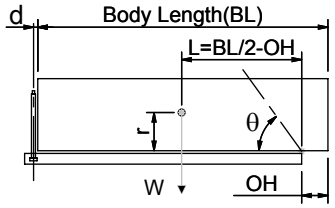

BODY LENGTH (BL)						OH
9500		10000		10500		
38	51°	35	49°	34	46°	150
41	53°	38	50°	36	48°	450
45	55°	42	52°	39	49°	750

Tipping angle (θ)
Body + payload mass,W (tonne)

d = 229; r = 900; Working Pressure 150 bar

For guidance only;
Higher working pressures and tipping capacities may be possible.
To check your application email - applications@edbro.co.uk

NOTES

1. This cylinder is for lifting purposes only and side load conditions should be avoided
2. Cylinder is painted in primer paint to RAL5013
3. Refer to www.edbro.com for;-
   - Bracket details
   - Installation instructions that must be observed
   - Correct oil selection
   - An explanation of tipping capacity

Edbro
SETTING THE INDUSTRY STANDARD

Edbro plc
Nelson Street, Bolton, England, BL3 2JJ
Tel +44 (0) 1204 528888 Fax +44 (0) 1204 531957
Email: postmaster@edbro.com Web: www.edbro.com

Technical Specifications are subject to change without notice
Date Created/Updated: 07 November 2014
Refer www.edbro.com to confirm latest specification
All dimensions are in 'mm', unless otherwise stated

Cylinder Outline Drawing

CS17L058233S19L12C

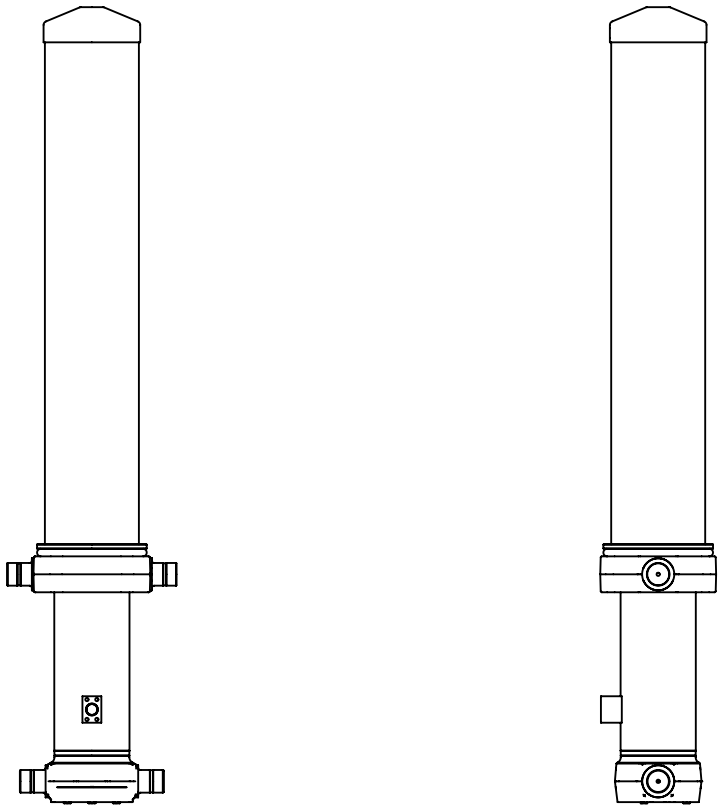

CS17L058233S19L12C

Edbro plc
Nelson Street, Bolton, Lancashire BL3 2JJ UK
Tel +44 (0) 1204 528888 Fax +44 (0) 1204 531957
Email: postmaster@edbro.com Web: www.edbro.com

SETTING THE INDUSTRY STANDARD

Technical Specifications are subject to change without notice

Date Created/Updated: 07 November 2014

Scale: 1:20