Cylinder 5 stage front end with outer cover

CS17L058983R29LBFB-404

**ALLOW 50mm TO REMOVE CAP FOR SERVICING

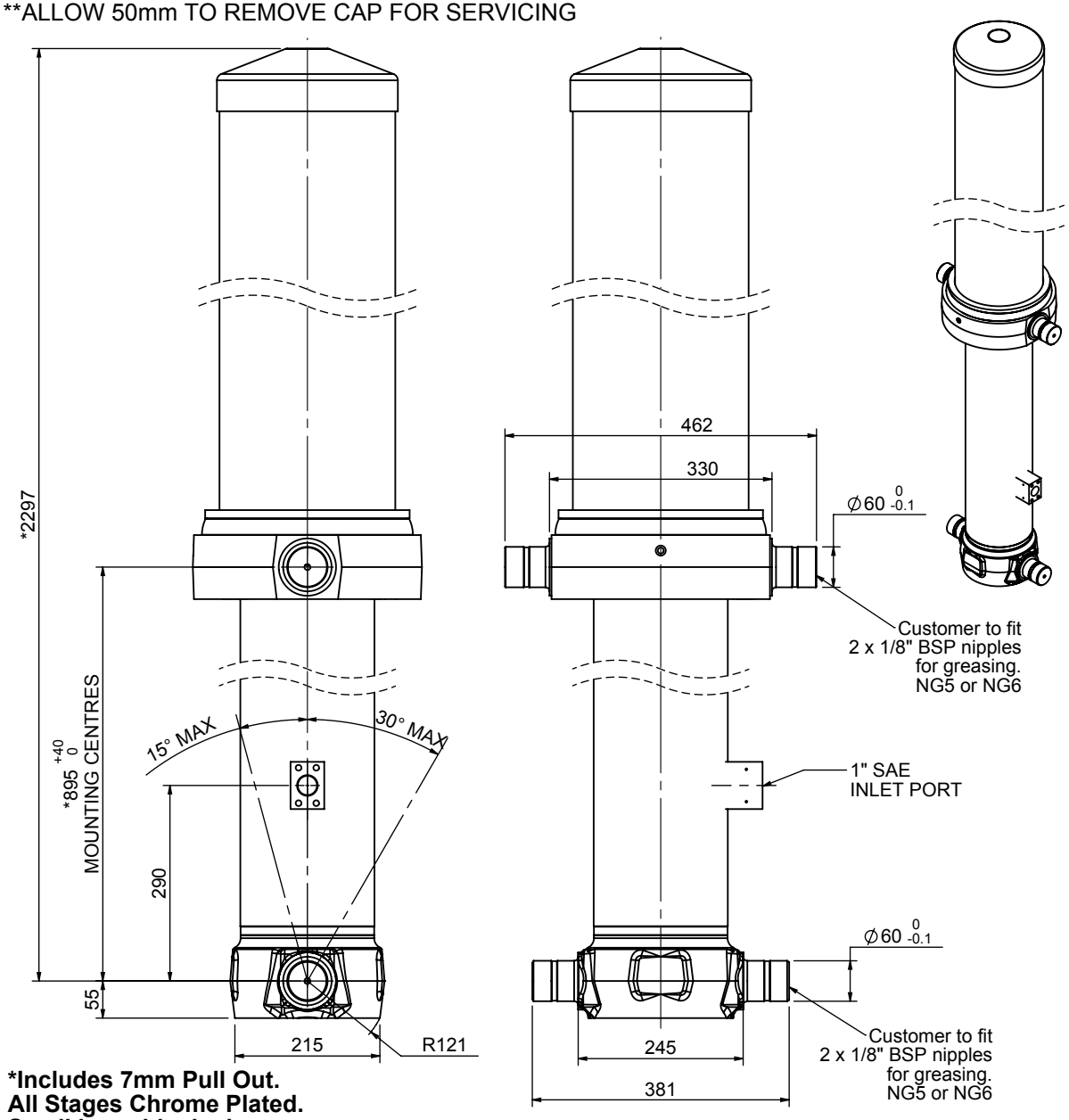

***Includes 7mm Pull Out.**
All Stages Chrome Plated.
Small inner blocked

SPECIFICATION — TIPPING CAPACITY : 26-34 TONNES***

Stage	Diameter	Length	Stroke	Swept Volume
OUTER COVER	261	1365	-	-
0	199	2225	-	-
1	176	2190	1970	47.9
2	155	2190	1987	37.5
3	136	2190	1997	29.0
4	117	2190	1512	16.3
5	98	2190	1517	11.4
4th stage stroke reduced by	500	Total (+5/-10)	8983	142
Final stroke reduced by	500	Priming Volume		15.2
Cylinder Mass (Kg)	381	Total Volume (Litres)		157.2
Maximum Pressure (Bar)	190	Max. first stage thrust		200 KN

***TIPPING CAPACITY AT WORKING PRESSURE

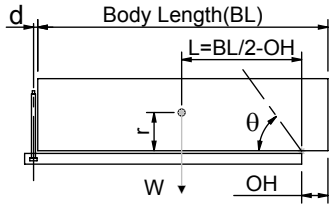

BODY LENGTH (BL)						OH
10500		11000		11500		
29	51°	28	48°	26	46°	150
31	52°	29	50°	28	47°	450
34	54°	31	51°	30	49°	750

Tipping angle (θ)
Body + payload mass,W (tonne)

d = 229; r = 900; Working Pressure 120 bar

For guidance only;
Higher working pressures and tipping capacities may be possible.
To check your application email - applications@edbro.co.uk

NOTES

1. This cylinder is for lifting purposes only and side load conditions should be avoided
2. Cylinder is painted in buff coloured primer paint
3. Refer to www.edbro.com for;-
   - Bracket details
   - Installation instructions that must be observed
   - Correct oil selection
   - An explanation of tipping capacity

JOST UK Ltd
Edbro House, Nelson Street, Bolton, England, BL3 2JJ
Tel +44 (0) 1204 528888 Fax +44 (0) 1204 531957
Email: sales-uk@jost-world.com Web: www.edbro.com

Technical Specifications are subject to change without notice
Date Created/Updated: 06 November 2020
Refer www.edbro.com to confirm latest specification
All dimensions are in 'mm', unless otherwise stated