Cylinder 5 stage front end with outer cover

CS17L058983S19L12C

**ALLOW 50mm TO REMOVE CAP FOR SERVICING

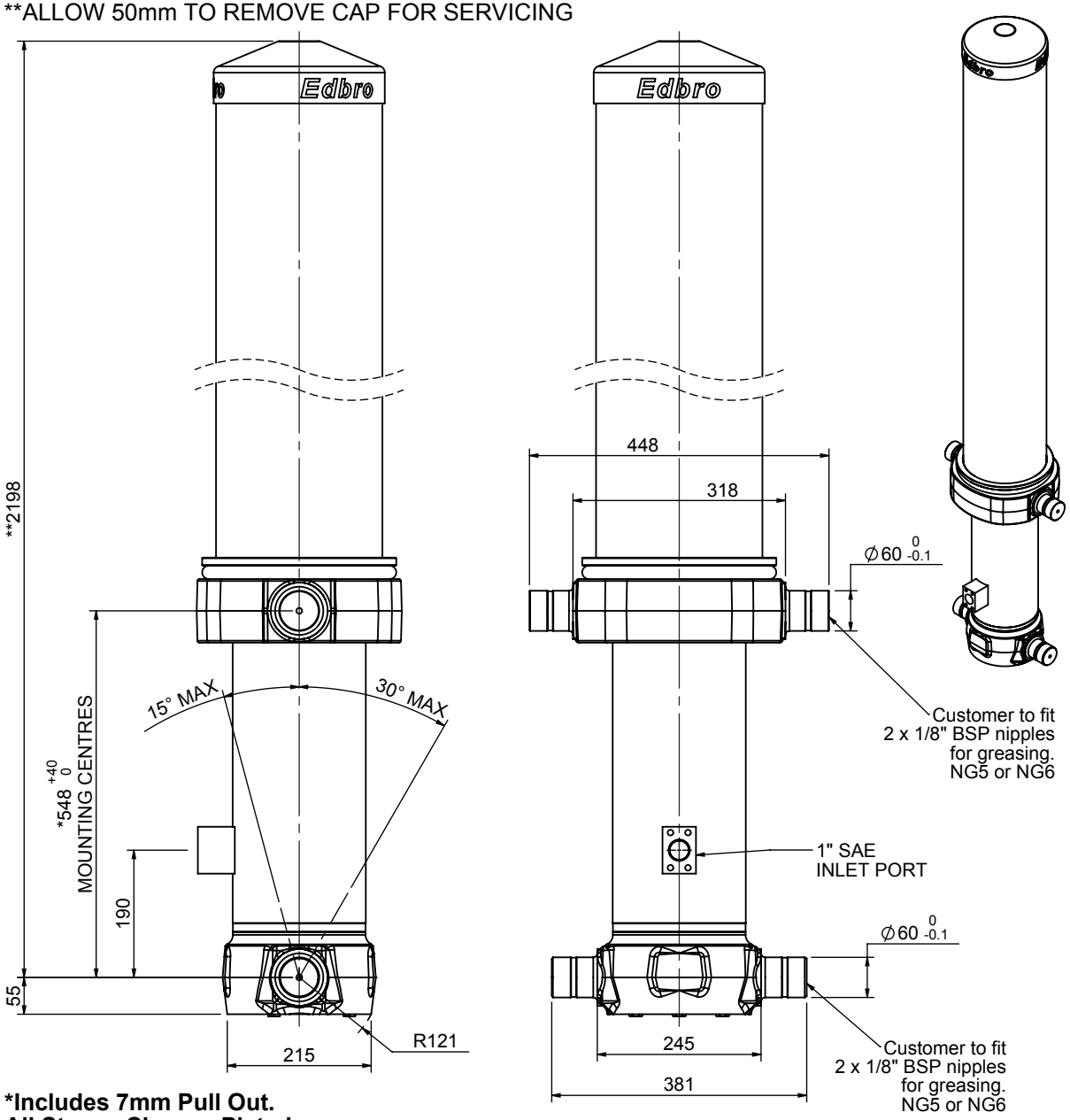

***Includes 7mm Pull Out.**
All Stages Chrome Plated

SPECIFICATION — TIPPING CAPACITY : 23-29 TONNES***

Stage	Diameter	Length	Stroke	Swept Volume
OUTER COVER	248	1615	-	-
0	199	2125	-	-
1	176	2090	1870	46
2	155	2090	1887	36
3	136	2090	1897	28
4	117	2090	1912	21
5	98	2090	1417	11
		Total (+5/-10)	8983	142
Final stroke reduced by	500	Priming Volume		28.4
Cylinder Mass (Kg)	369	Total Volume (Litres)		170.4
Maximum Pressure (Bar)	190	Max. first stage thrust		200 KN

***TIPPING CAPACITY AT WORKING PRESSURE

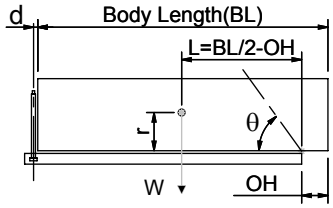

BODY LENGTH (BL)						OH
11000		11500		12000		
25	48°	24	46°	23	44°	150
27	50°	26	47°	25	45°	450
29	51°	27	49°	26	46°	750

Tipping angle (θ)
Body + payload mass,W (tonne)

d = 229; r = 900; Working Pressure 110 bar

For guidance only;
Higher working pressures and tipping capacities may be possible.
To check your application email - applications@edbro.co.uk

NOTES

1. This cylinder is for lifting purposes only and side load conditions should be avoided
2. Cylinder is painted in primer paint to RAL5013
3. Refer to www.edbro.com for;-
   - Bracket details
   - Installation instructions that must be observed
   - Correct oil selection
   - An explanation of tipping capacity

Edbro
SETTING THE INDUSTRY STANDARD

Edbro plc
Nelson Street, Bolton, England, BL3 2JJ
Tel +44 (0) 1204 528888 Fax +44 (0) 1204 531957
Email: postmaster@edbro.com Web: www.edbro.com

Technical Specifications are subject to change without notice
Date Created/Updated: 07 November 2014
Refer www.edbro.com to confirm latest specification
All dimensions are in 'mm', unless otherwise stated

Cylinder Outline Drawing

CS17L058983S19L12C

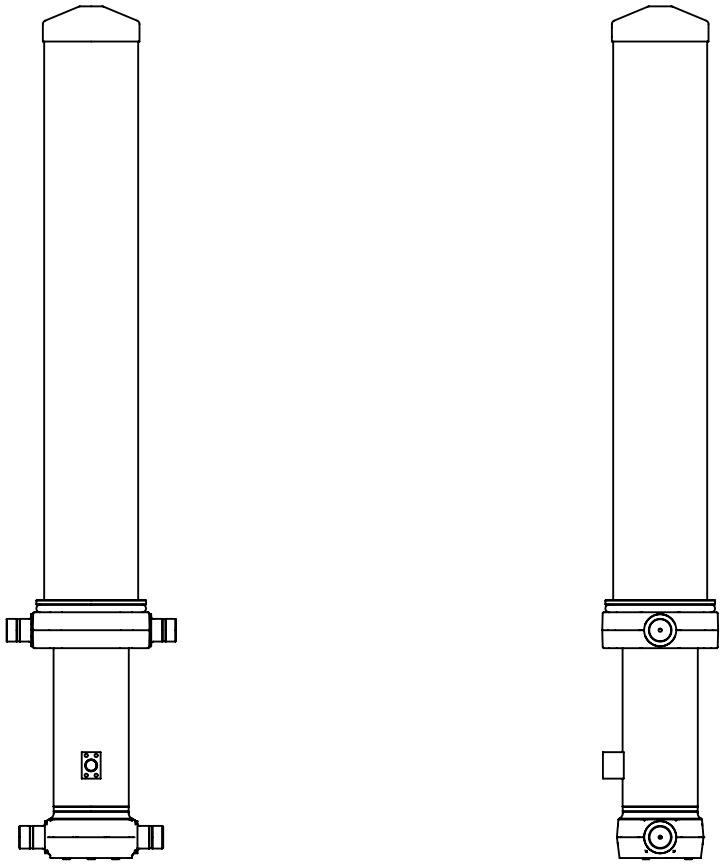

CS17L058983S19L12C

Edbro plc
Nelson Street, Bolton, Lancashire BL3 2JJ UK
Tel +44 (0) 1204 528888 Fax +44 (0) 1204 531957
Email: postmaster@edbro.com Web: www.edbro.com

SETTING THE INDUSTRY STANDARD

Technical Specifications are subject to change without notice

Date Created/Updated: 07 November 2014

Scale: 1:20