Cylinder 5 stage front end with plain eye

CS17LE56233B19A02C

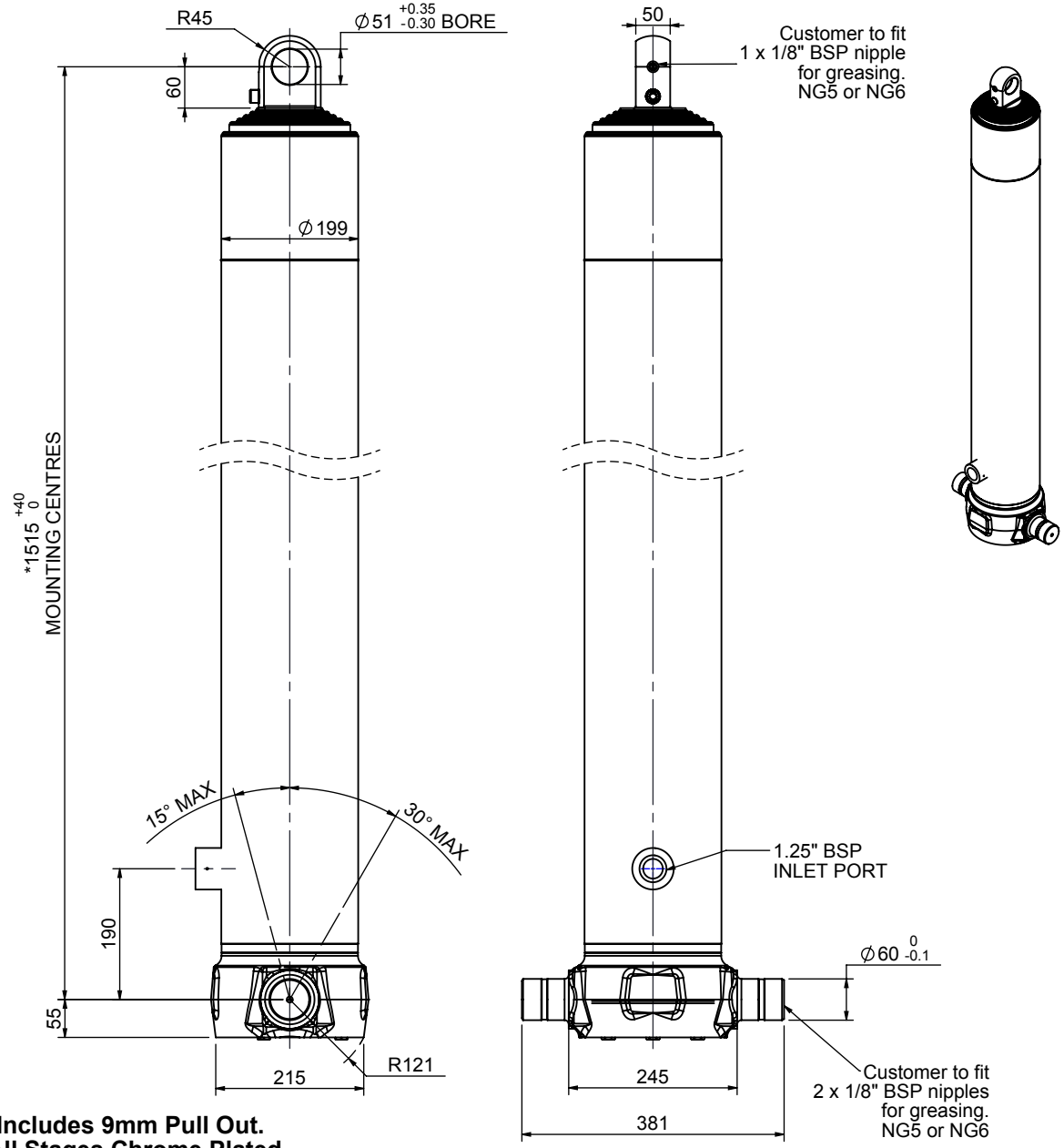

***Includes 9mm Pull Out.**
All Stages Chrome Plated

SPECIFICATION — TIPPING CAPACITY : 28-40 TONNES***

Stage	Diameter	Length	Stroke	Swept Volume
-	-	-	-	-
0	199	1475	-	-
1	176	1440	1218	30
2	155	1440	1237	23
3	136	1440	1247	18
4	117	1440	1262	14
5	98	1440	1267	10
		Total (+5/-10)	6231	95
Final stroke reduced by	0	Priming Volume		19.3
Cylinder Mass (Kg)	207	Total Volume (Litres)		114.3
Maximum Pressure (Bar)	190	Max. first stage thrust		200 KN

***TIPPING CAPACITY AT WORKING PRESSURE

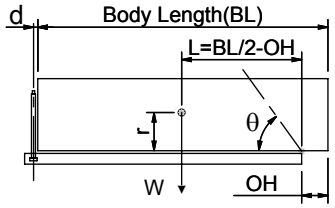

BODY LENGTH (BL)						OH
7750		8250		8750		
32	49°	30	46°	28	43°	150
35	52°	32	48°	30	45°	450
40	54°	36	50°	33	47°	750

Tipping angle (θ)
Body + payload mass,W (tonne)

d = 0; r = 900; Working Pressure 135 bar

For guidance only;
Higher working pressures and tipping capacities may be possible.
To check your application email - applications@edbro.co.uk

NOTES

1. This cylinder is for lifting purposes only and side load conditions should be avoided
2. Cylinder is painted in primer paint to RAL5013
3. Refer to www.edbro.com for;-
   - Bracket details
   - Installation instructions that must be observed
   - Correct oil selection
   - An explanation of tipping capacity

Edbro
SETTING THE INDUSTRY STANDARD

Edbro plc
Nelson Street, Bolton, England, BL3 2JJ
Tel +44 (0) 1204 528888 Fax +44 (0) 1204 531957
Email: postmaster@edbro.com Web: www.edbro.com

Technical Specifications are subject to change without notice

Date Created/Updated: 22 October 2014

Refer www.edbro.com to confirm latest specification
All dimensions are in 'mm', unless otherwise stated

Cylinder Outline Drawing

CS17LE56233B19A02C

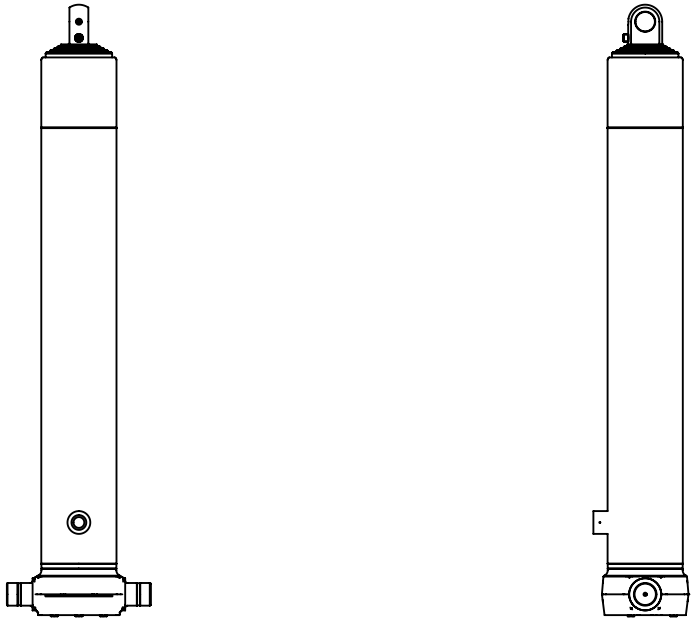

CS17LE56233B19A02C

Edbro plc
Nelson Street, Bolton, Lancashire BL3 2JJ UK
Tel +44 (0) 1204 528888 Fax +44 (0) 1204 531957
Email: postmaster@edbro.com Web: www.edbro.com

SETTING THE INDUSTRY STANDARD

Technical Specifications are subject to change without notice

Date Created/Updated: 22 October 2014

Scale: 1:20