Cylinder 5 stage front end with spherical eye

CS17LS55983S40A02HE-203

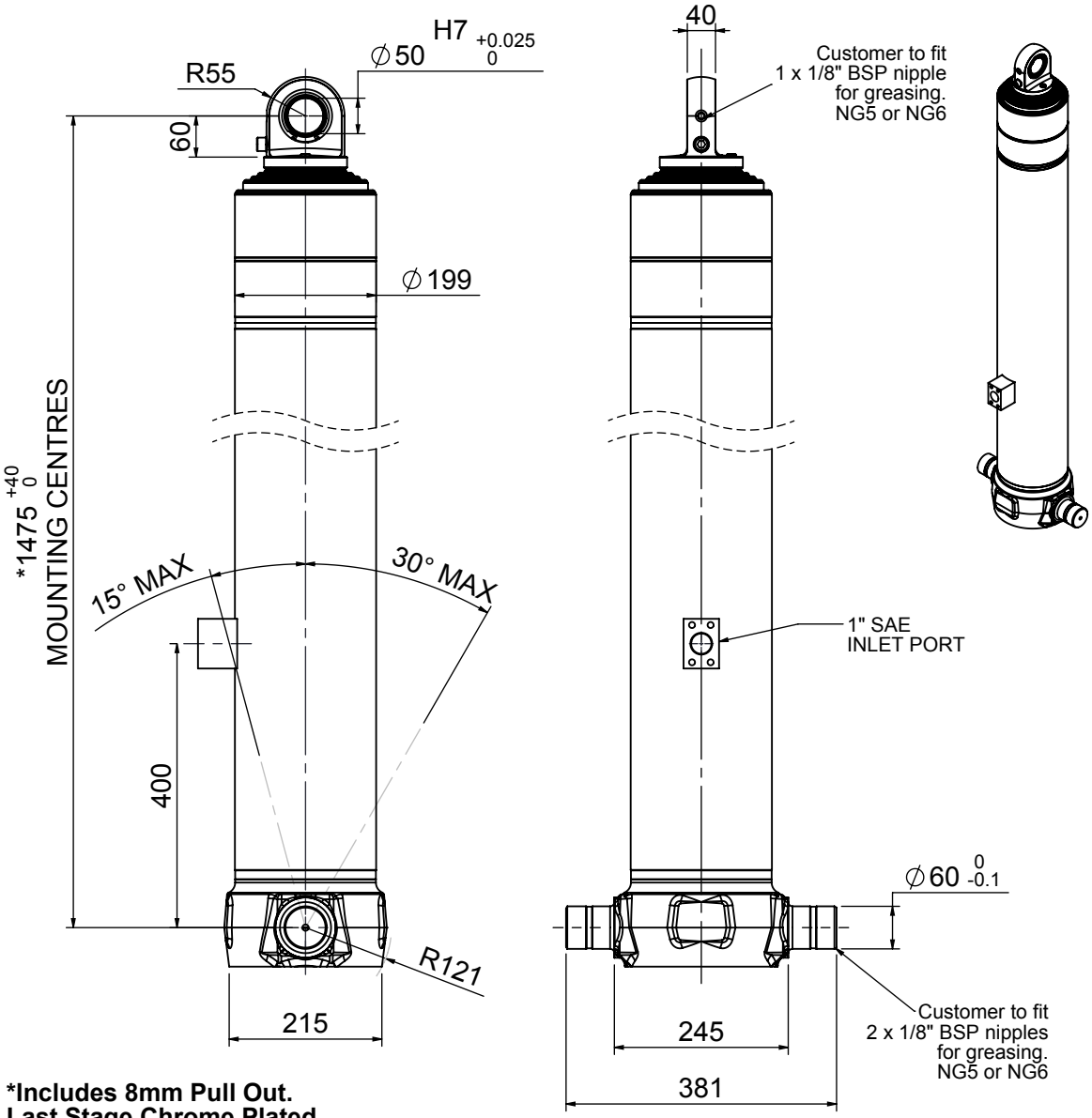

***Includes 8mm Pull Out.**
Last Stage Chrome Plated

SPECIFICATION — TIPPING CAPACITY : 31-44 TONNES***

Stage	Diameter	Length	Stroke	Swept Volume
-	-	-	-	-
0	199	1425	-	-
1	176	1390	1170	28
2	155	1390	1187	22
3	136	1390	1197	17
4	117	1390	1212	13
5	98	1390	1217	9
		Total (+5/-10)	5983	89
Final stroke reduced by	0	Priming Volume		11.6
Cylinder Mass (Kg)	207	Total Volume (Litres)		100.6
Maximum Pressure (Bar)	190	Max. first stage thrust		200 KN

***TIPPING CAPACITY AT WORKING PRESSURE

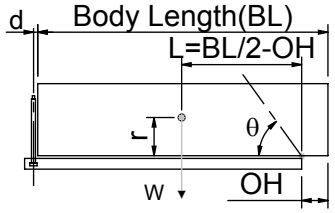

BODY LENGTH (BL)						OH
7480		7854		8228		
35	49°	33	46°	31	44°	150
39	51°	36	48°	33	44°	450
44	54°	40	51°	38	48°	750

Tipping angle (θ)

Body + payload mass,W (tonne)

d = 0; r = 900; Working Pressure 146 bar

For guidance only;
Higher working pressures and tipping capacities may be possible.
To check your application email - applications@edbro.co.uk

NOTES

1. This cylinder is for lifting purposes only and side load conditions should be avoided
2. Cylinder is painted in black primer paint to RAL9005
3. Refer to www.edbro.com for;-
   - Bracket details
   - Installation instructions that must be observed
   - Correct oil selection
   - An explanation of tipping capacity

JOST UK Ltd
Edbro House, Nelson Street, Bolton, England, BL3 2JJ
Tel +44 (0) 1204 528888 Fax +44 (0) 1204 531957
Email: sales@jost-world.com Web: www.edbro.com

Technical Specifications are subject to change without notice
Date Created/Updated: 24 November 2020
Refer www.edbro.com to confirm latest specification
All dimensions are in 'mm', unless otherwise stated