Cylinder 5 stage front end with spherical eye

CS17LS56233R25A02/CAP

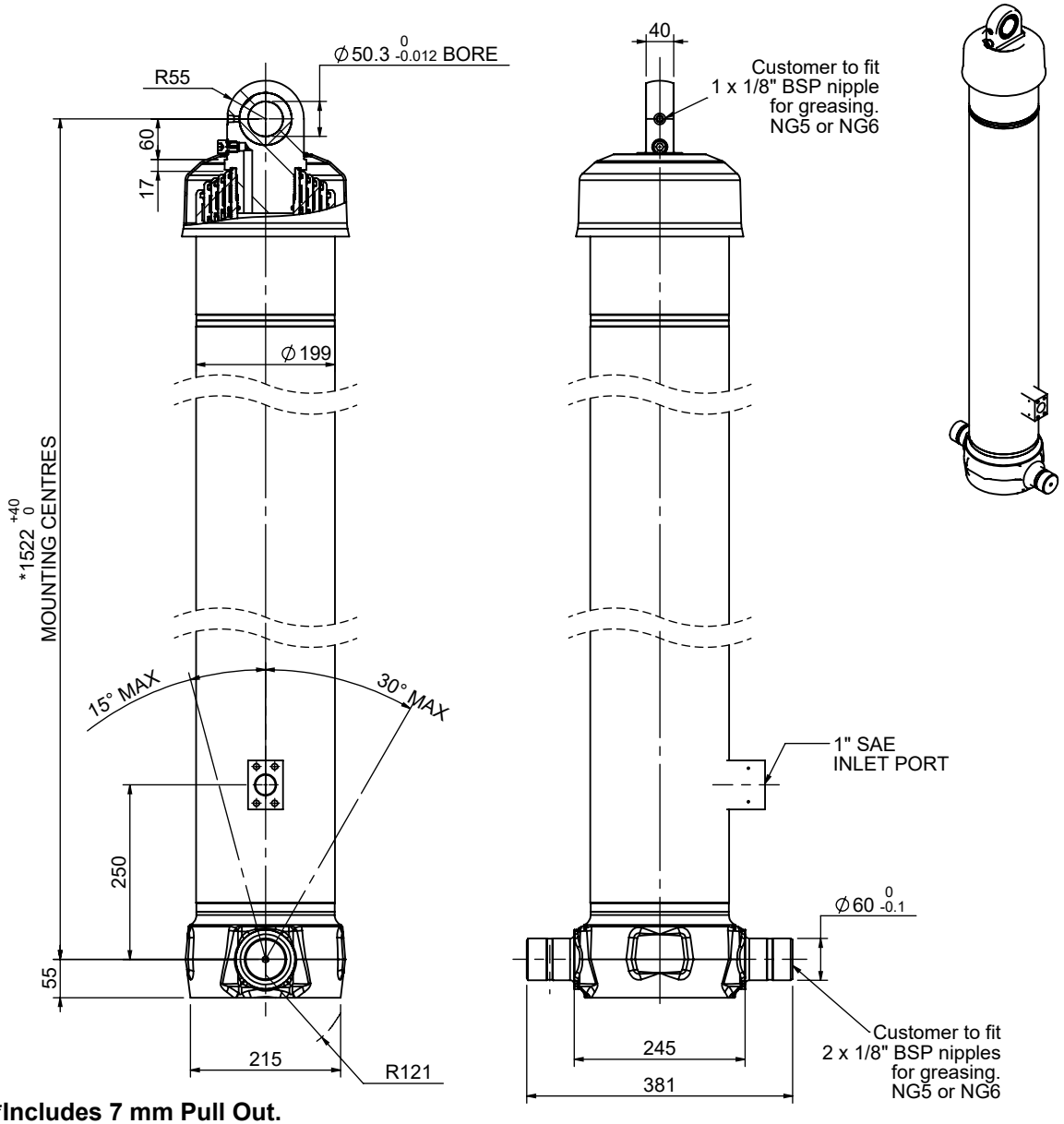

***Includes 7 mm Pull Out.**
Last Stage Chrome Plated

SPECIFICATION — TIPPING CAPACITY : 28 - 40 TONNES***

Stage	Diameter	Length	Stroke	Swept Volume
-	-	-	-	-
0	199	1475	-	-
1	176	1440	1220	30
2	155	1440	1237	23
3	136	1440	1247	18
4	117	1440	1262	14
5	98	1440	1267	10
		Total (+5/-10)	6233	95
Final stroke reduced by	0	Priming Volume		18
Cylinder Mass (Kg)	211	Total Volume (Litres)		113
Maximum Pressure (Bar)	190	Max. first stage thrust		200 KN

***TIPPING CAPACITY AT WORKING PRESSURE

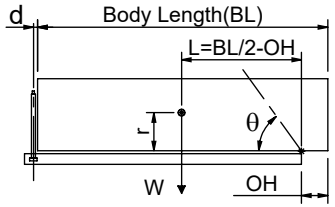

BODY LENGTH (BL)						OH
7750		8250		8750		
32	49°	30	46°	28	43°	150
35	52°	32	48°	30	45°	450
40	54°	36	50°	33	47°	750

Tipping angle (θ)

Body + payload mass,W (tonne)

d = 0; r = 900; Working Pressure 135 bar

For guidance only;
Higher working pressures and tipping capacities may be possible.
To check your application email - applications@edbro.co.uk

NOTES

1. This cylinder is for lifting purposes only and side load conditions should be avoided
2. Cylinder is painted in primer paint to RAL5013
3. Refer to www.edbro.com for;-
   - Bracket details
   - Installation instructions that must be observed
   - Correct oil selection
   - An explanation of tipping capacity

EDBRO Ltd.
Edbro House, Nelson Street, Bolton, England, BL3 2JJ
Tel +44 (0) 1204 528888 Fax +44 (0) 1204 531957
Email: sales@edbro.com Web: www.edbro.com

Technical Specifications are subject to change without notice
Date Created/Updated: 06 August 2021
Refer www.edbro.com to confirm latest specification
All dimensions are in 'mm', unless otherwise stated