Cylinder 5 stage front end with spherical eye

CS17LS56233S40A02D-203

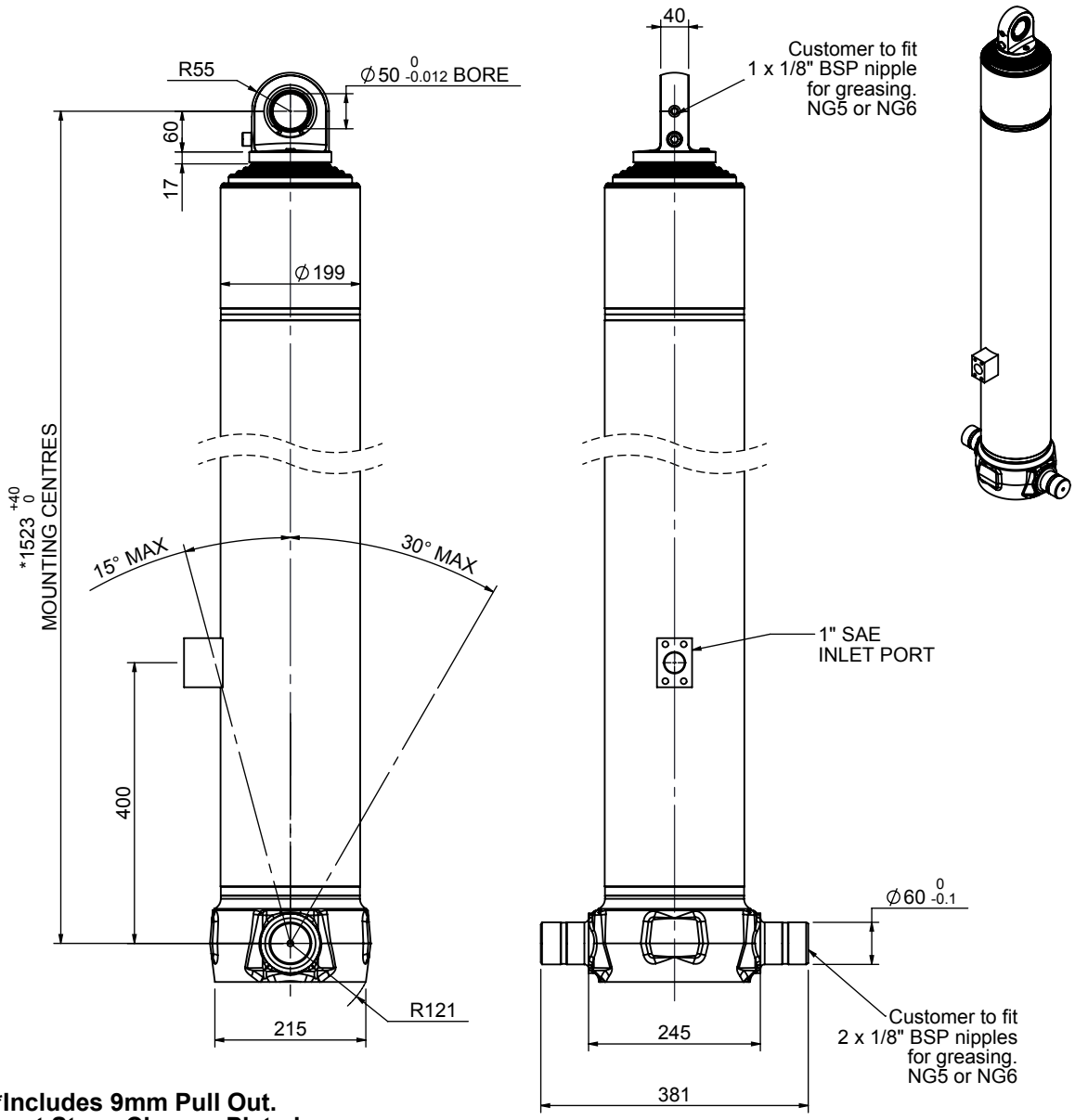

***Includes 9mm Pull Out.**
Last Stage Chrome Plated

SPECIFICATION — TIPPING CAPACITY : 28-39 TONNES***

Stage	Diameter	Length	Stroke	Swept Volume
-	-	-	-	-
0	199	1475	-	-
1	176	1440	1220	30
2	155	1440	1237	23
3	136	1440	1247	18
4	117	1440	1262	14
5	98	1440	1267	10
		Total (+5/-10)	6233	95
Final stroke reduced by	0	Priming Volume		18.5
Cylinder Mass (Kg)	212	Total Volume (Litres)		113.5
Maximum Pressure (Bar)	190	Max. first stage thrust		200 KN

***TIPPING CAPACITY AT WORKING PRESSURE

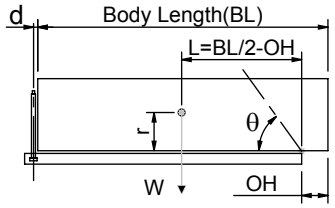

BODY LENGTH (BL)						OH
7500		8000		8500		
31	49°	29	46°	28	43°	150
35	52°	32	48°	30	45°	450
39	54°	35	50°	33	47°	750

Tipping angle (θ)

Body + payload mass,W (tonne)

d = 0; r = 900; Working Pressure 133 bar

For guidance only;
Higher working pressures and tipping capacities may be possible.
To check your application email - applications@edbro.co.uk

NOTES

1. This cylinder is for lifting purposes only and side load conditions should be avoided
2. Cylinder is painted in black primer paint to RAL9005
3. Refer to www.edbro.com for;-
   - Bracket details
   - Installation instructions that must be observed
   - Correct oil selection
   - An explanation of tipping capacity

JOST UK Ltd
Edbro House, Nelson Street, Bolton, England, BL3 2JJ
Tel +44 (0) 1204 528888 Fax +44 (0) 1204 531957
Email: sales@jost-world.com Web: www.edbro.com

Technical Specifications are subject to change without notice

Date Created/Updated: 15 November 2018

Refer www.edbro.com to confirm latest specification
All dimensions are in 'mm', unless otherwise stated