Cylinder 5 stage front end with outer cover

CS180057983B19A11

****ALLOW 50mm TO REMOVE CAP FOR SERVICING**

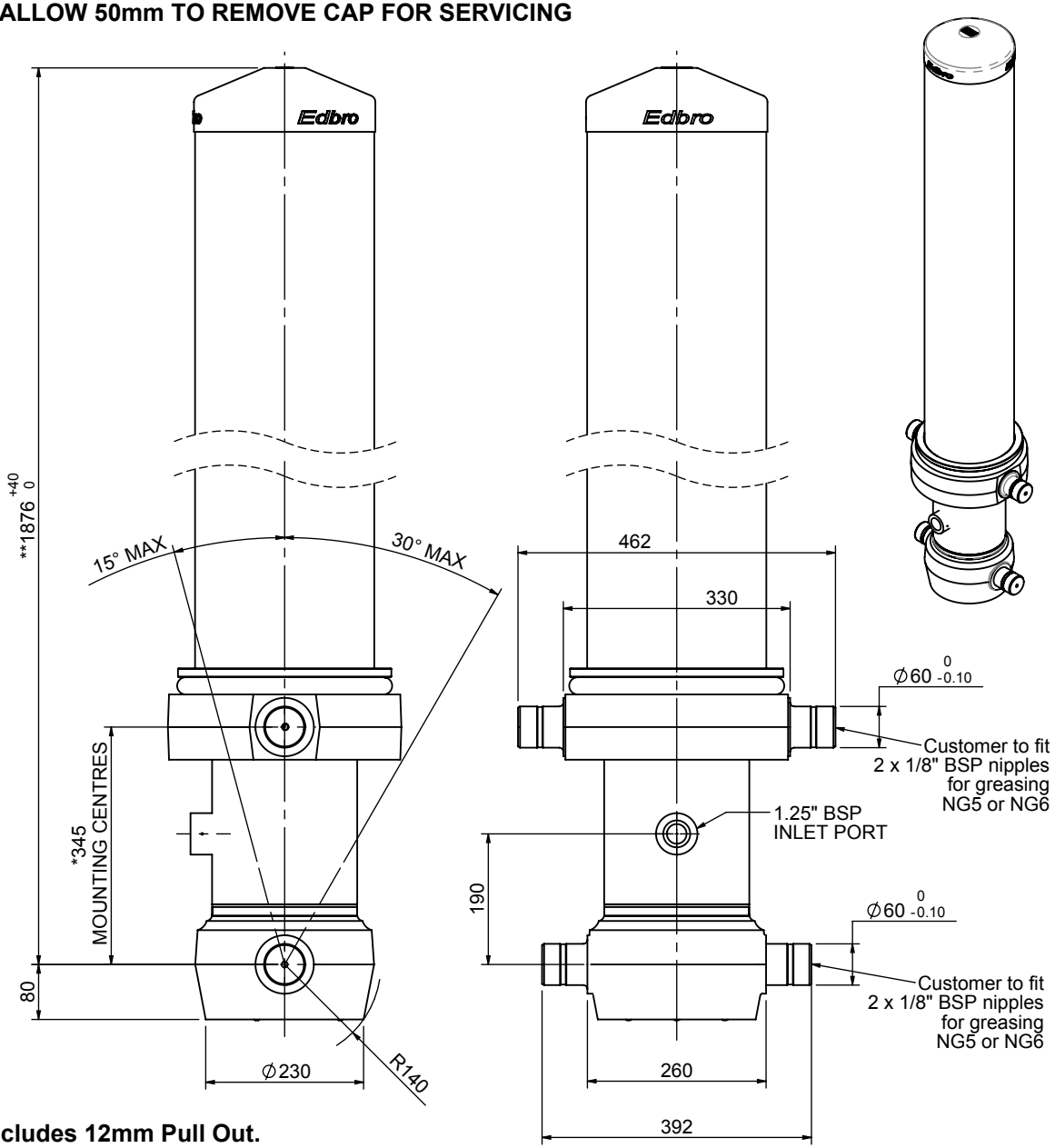

***Includes 12mm Pull Out.**

SPECIFICATION			TIPPING CAPACITY : 44-58 TONNES***	
Stage	Diameter	Length	Stroke	Swept Volume
OUTER COVER	261	1495	-	-
0	211	1825	-	-
1	188	1790	1565	43
2	167	1790	1587	35
3	147	1790	1597	27
4	127	1790	1612	20
5	105	1790	1617	14
		Total (+5/-10)	7978	139
Final stroke reduced by	0	Priming Volume		26
Cylinder Mass (Kg)	398	Total Volume (Litres)		165
Maximum Pressure (Bar)	190	Max. first stage thrust		265 KN

*****TIPPING CAPACITY AT WORKING PRESSURE**

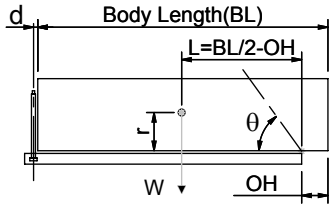

BODY LENGTH (BL)						OH
9250		9750		10250		
48	51°	46	48°	44	46°	150
52	53°	49	49°	47	47°	450
58	55°	53	51°	50	49°	750

Tipping angle (θ)

Body + payload mass,W (tonne)

d = 229; r = 900; Working Pressure 175 bar

For guidance only;
Higher working pressures and tipping capacities may be possible.
To check your application email - applications@edbro.co.uk

NOTES

1. This cylinder is for lifting purposes only and side load conditions should be avoided
2. Cylinder is painted in primer paint to RAL5013
3. Refer to www.edbro.com for;-
   - Bracket details
   - Installation instructions that must be observed
   - Correct oil selection
   - An explanation of tipping capacity

Edbro
SETTING THE INDUSTRY STANDARD

Edbro plc
Nelson Street, Bolton, England, BL3 2JJ
Tel +44 (0) 1204 528888 Fax +44 (0) 1204 531957
Email: postmaster@edbro.com Web: www.edbro.com

Technical Specifications are subject to change without notice

Date Created/Updated: 17 August 2012

Refer www.edbro.com to confirm latest specification
All dimensions are in 'mm', unless otherwise stated

Cylinder Outline Drawing

CS180057983B19A11

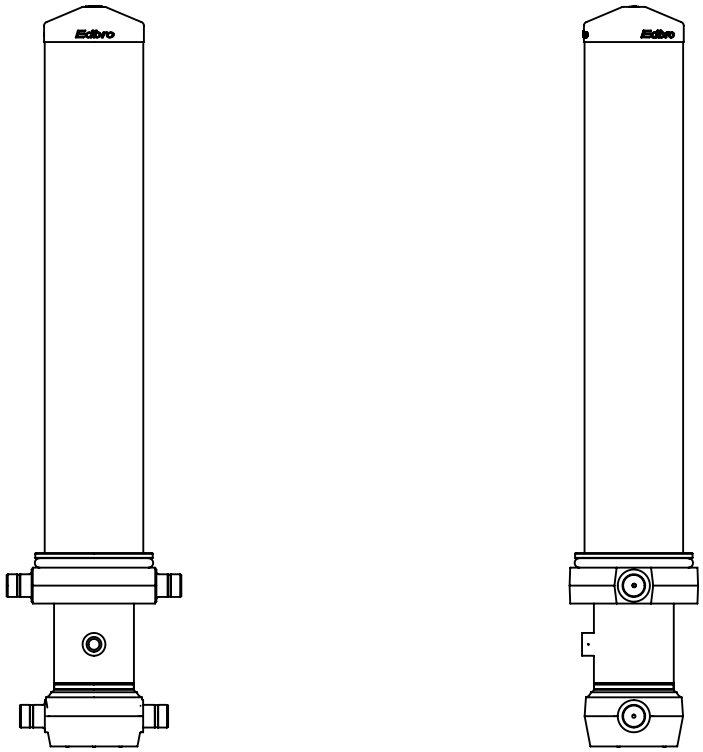

CS180057983B19A11

Edbro plc
Nelson Street, Bolton, Lancashire BL3 2JJ UK
Tel +44 (0) 1204 528888 Fax +44 (0) 1204 531957
Email: postmaster@edbro.com Web: www.edbro.com

SETTING THE INDUSTRY STANDARD

Technical Specifications are subject to change without notice

Date Created/Updated: 17 August 2012

Scale: 1:20