Cylinder 5 stage front end with Outer Cover

CS180058983B19A11

****ALLOW 50mm TO REMOVE CAP FOR SERVICING**

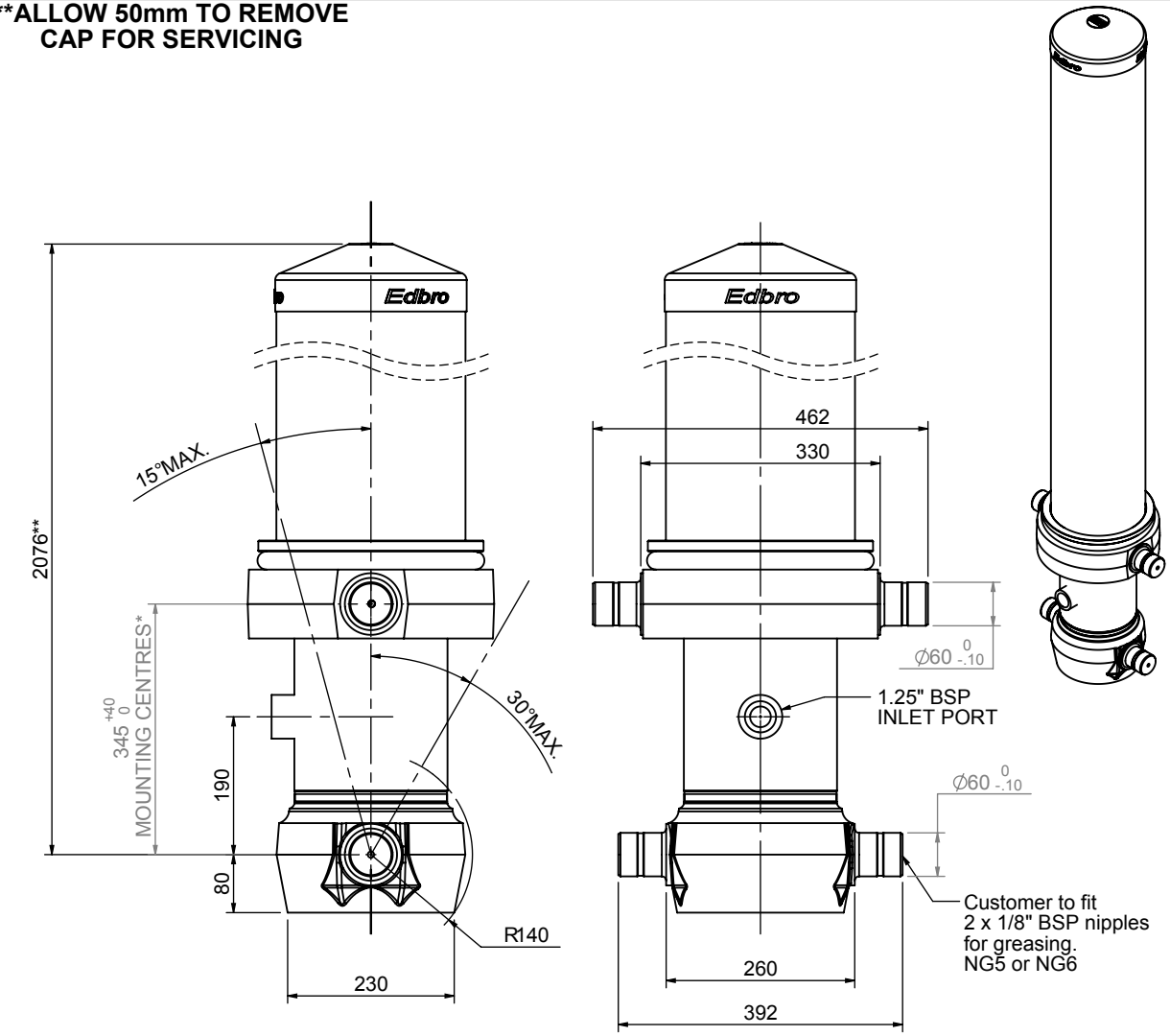

***Includes 12mm Pull Out**

SPECIFICATION			RATED CAPACITY : 32-39 TONNES***	
Stage	Diameter	Length	Stroke	Swept Volume
OUTER COVER	261	1695	-	-
0	211	2025	-	-
1	188	1990	1764	49
2	167	1990	1787	39
3	147	1990	1797	31
4	127	1990	1812	23
5	105	1990	1817	16
Final stroke reduced by	0	Total (+5/-10)	8977	158
Cylinder Mass (Kg)	435.13	Priming Volume		29
Rated Pressure (Bar)	135	Total Volume (Litres)		187
Maximum Pressure (Bar)	175	Max. first stage thrust		260 KN

***TIPPING CAPACITY AT RATED PRESSURE

d = 229 ; r = 900

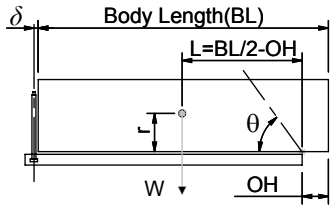

BODY LENGTH (BL)						OH
11000		11500		12000		
34	48°	33	46°	32	44°	150
36	49°	35	47°	34	45°	450
39	51°	37	48°	36	46°	750

Tipping angle (θ)

Body + payload mass,W (tonne)

For guidance only;
Higher Rated Pressures may be possible. To check your application, email Edbro plc at <applications@edbro.co.uk>

NOTES

- If hydraulic pressure is used to limit overloading, the system relief valve must be set to the Rated Pressure unless agreed otherwise by Edbro
- The system relief valve can be set to Maximum Pressure if the load is limited by other means.See RATINGS page for advice
- This cylinder is for lifting purposes only and sideload conditions must be avoided
- Cylinder is painted in primer paint to RAL5013
- See bracket options page BRKT01, BRKT02
- See installation instructions INSTALL01
- Use oil according to specification OIL01

Edbro
SETTING THE INDUSTRY STANDARD

Edbro plc
Nelson Street, Bolton, Lancashire BL3 2JJ UK
Tel +44 (0) 1204 528888 Fax +44 (0) 1204 531957
Email: postmaster@edbro.com Web: www.edbro.com

Technical Specifications are subject to change without notice
Date Created/Updated: 01 September 2009 09:22:45
Refer www.edbro.com to confirm latest specification
All dimensions are in 'mm', unless otherwise stated