Cylinder 5 stage front end with Outer Cover

CS180059233S19A11

****ALLOW 50mm TO REMOVE CAP FOR SERVICING**

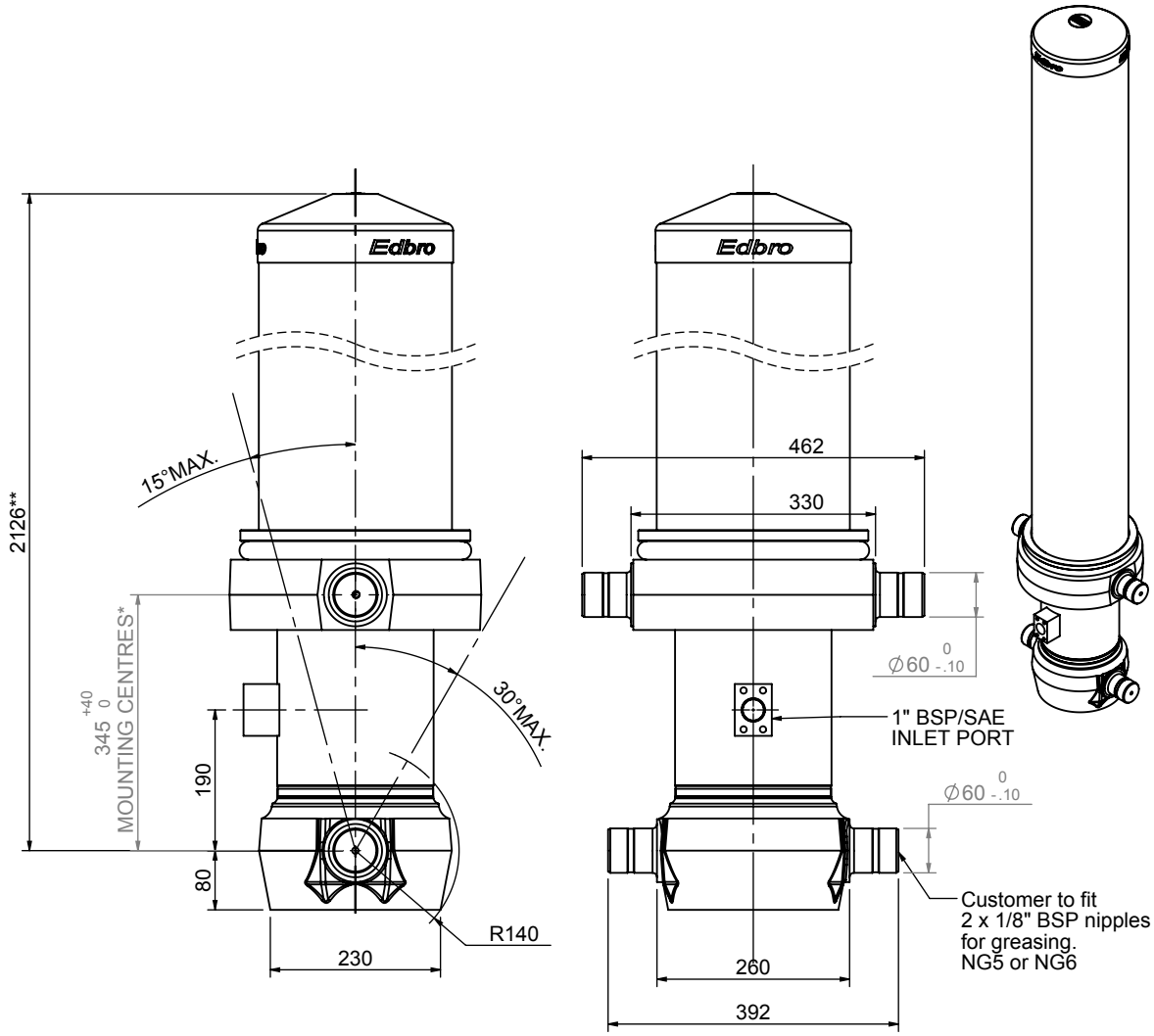

***Includes 12mm Pull Out**

SPECIFICATION — RATED CAPACITY : 28-34 TONNES***

Stage	Diameter	Length	Stroke	Swept Volume
OUTER COVER	261	1745	-	-
0	211	2075	-	-
1	188	2040	1814	50
2	167	2040	1837	40
3	147	2040	1847	31
4	127	2040	1862	24
5	105	2040	1867	16
Final stroke reduced by	0	Total (+5/-10)	9227	161
Cylinder Mass (Kg)	444.11	Priming Volume		30
Rated Pressure (Bar)	120	Total Volume (Litres)		191
Maximum Pressure (Bar)	175	Max. first stage thrust		260 KN

***TIPPING CAPACITY AT RATED PRESSURE

d = 229 ; r = 900

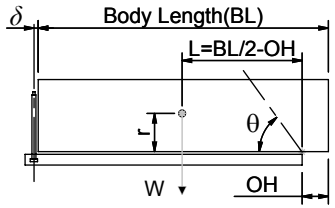

BODY LENGTH (BL)						OH
11500		12000		12500		
30	47°	29	45°	28	43°	150
32	48°	31	46°	30	44°	450
34	50°	32	48°	31	45°	750

Tipping angle (θ)

Body + payload mass,W (tonne)

For guidance only;
Higher Rated Pressures may be possible. To check your application, email Edbro plc at <applications@edbro.co.uk>

NOTES

- If hydraulic pressure is used to limit overloading, the system relief valve must be set to the Rated Pressure unless agreed otherwise by Edbro
- The system relief valve can be set to Maximum Pressure if the load is limited by other means.See RATINGS page for advice
- This cylinder is for lifting purposes only and sideload conditions must be avoided
- Cylinder is painted in primer paint to RAL5013
- See bracket options page BRKT01, BRKT02
- See installation instructions INSTALL01
- Use oil according to specification OIL01

Edbro
SETTING THE INDUSTRY STANDARD

Edbro plc
Nelson Street, Bolton, Lancashire BL3 2JJ UK
Tel +44 (0) 1204 528888 Fax +44 (0) 1204 531957
Email: postmaster@edbro.com Web: www.edbro.com

Technical Specifications are subject to change without notice
Date Created/Updated: 26 August 2009 14:32:11
Refer www.edbro.com to confirm latest specification
All dimensions are in 'mm', unless otherwise stated