Cylinder 5 stage front end with outer cover

CS180059483B25A14

****ALLOW 50mm TO REMOVE CAP FOR SERVICING**

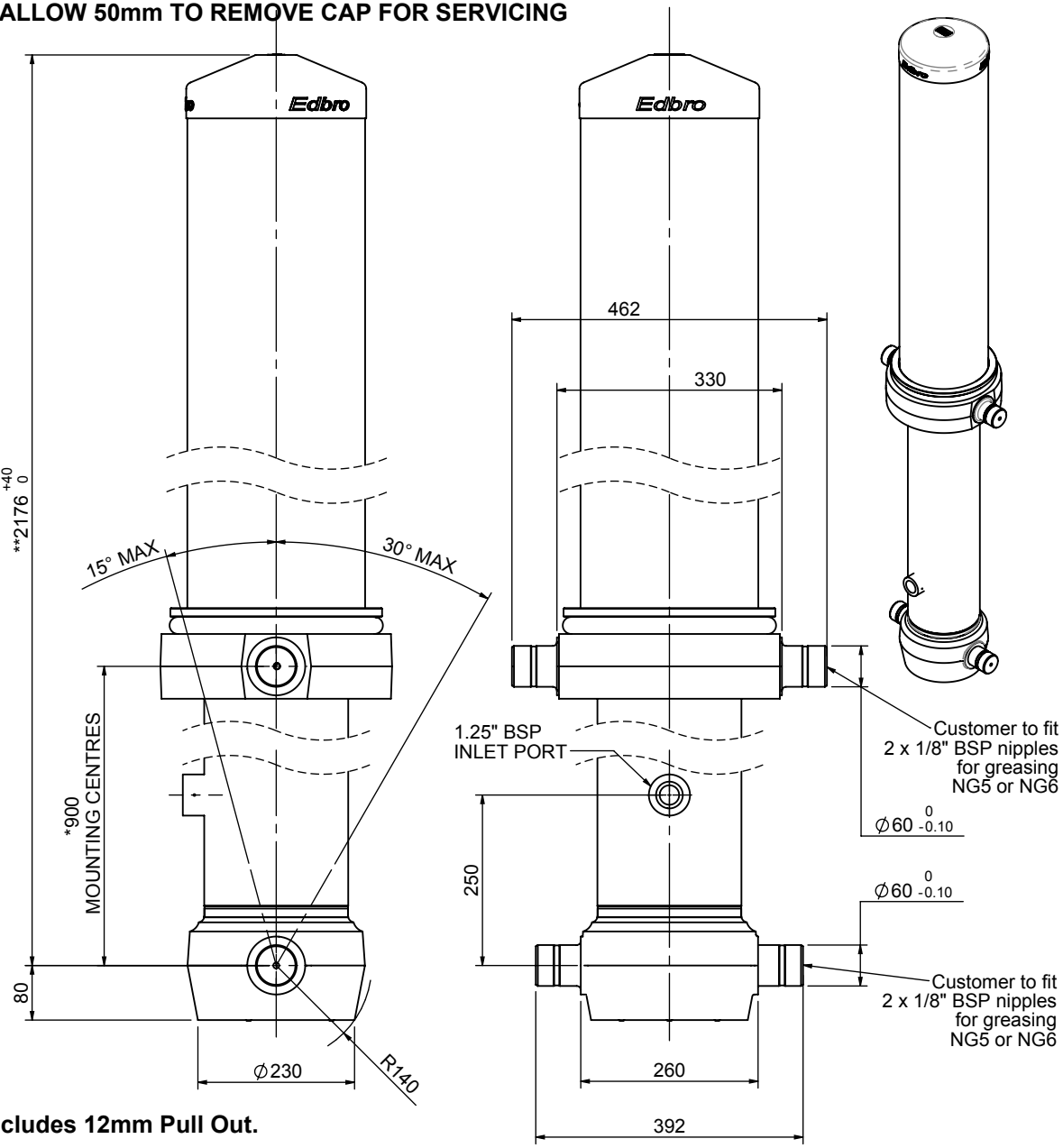

***Includes 12mm Pull Out.**

SPECIFICATION			TIPPING CAPACITY : 29-36 TONNES***	
Stage	Diameter	Length	Stroke	Swept Volume
OUTER COVER	261	1240	-	-
0	211	2125	-	-
1	188	2090	1865	52
2	167	2090	1887	41
3	147	2090	1897	32
4	127	2090	1912	24
5	105	2090	1917	17
		Total (+5/-10)	9478	166
Final stroke reduced by	0	Priming Volume		31
Cylinder Mass (Kg)	435	Total Volume (Litres)		197
Maximum Pressure (Bar)	190	Max. first stage thrust		265 KN

***TIPPING CAPACITY AT WORKING PRESSURE

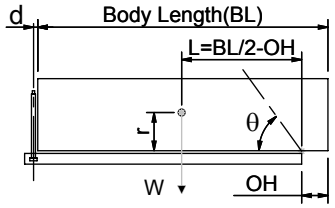

BODY LENGTH (BL)						OH
11000		11500		12000		
32	51°	30	49°	29	46°	150
34	53°	32	50°	31	48°	450
36	54°	34	51°	33	49°	750

Tipping angle (θ)

Body + payload mass,W (tonne)

d = 229; r = 900; Working Pressure 120 bar

For guidance only;
Higher working pressures and tipping capacities may be possible.
To check your application email - applications@edbro.co.uk

NOTES

1. This cylinder is for lifting purposes only and side load conditions should be avoided
2. Cylinder is painted in primer paint to RAL5013
3. Refer to www.edbro.com for;-
   - Bracket details
   - Installation instructions that must be observed
   - Correct oil selection
   - An explanation of tipping capacity

Edbro
SETTING THE INDUSTRY STANDARD

Edbro plc
Nelson Street, Bolton, England, BL3 2JJ
Tel +44 (0) 1204 528888 Fax +44 (0) 1204 531957
Email: postmaster@edbro.com Web: www.edbro.com

Technical Specifications are subject to change without notice

Date Created/Updated: 17 August 2012

Refer www.edbro.com to confirm latest specification
All dimensions are in 'mm', unless otherwise stated

Cylinder Outline Drawing

CS180059483B25A14

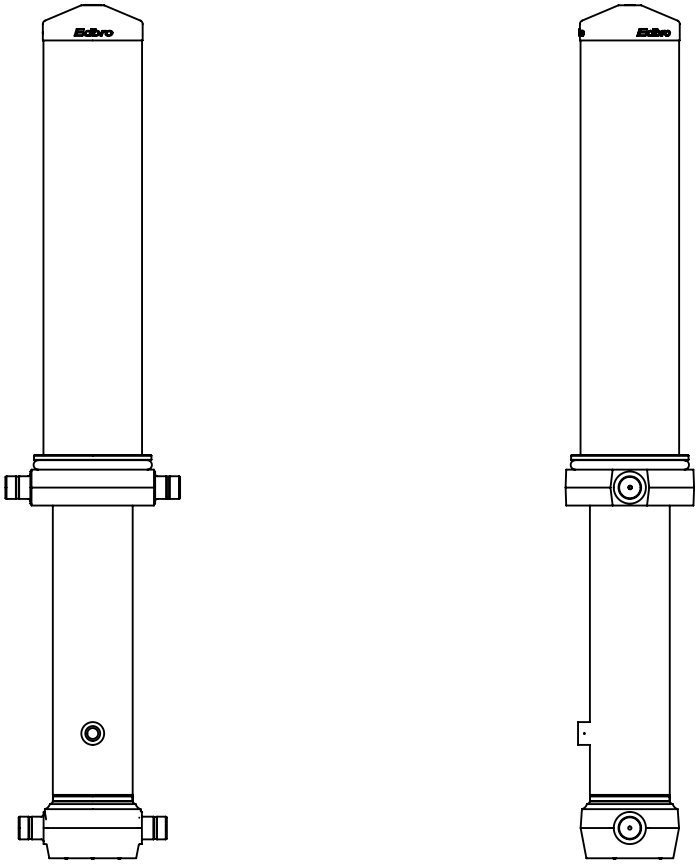

CS180059483B25A14

SETTING THE INDUSTRY STANDARD

Edbro plc
Nelson Street, Bolton, Lancashire BL3 2JJ UK
Tel +44 (0) 1204 528888 Fax +44 (0) 1204 531957
Email: postmaster@edbro.com Web: www.edbro.com

Technical Specifications are subject to change without notice

Date Created/Updated: 17 August 2012

Scale: 1:20