Cylinder 5 stage front end with outer cover

CS18L057733B25A15

** ALLOW 50mm TO REMOVE CAP FOR SERVICING

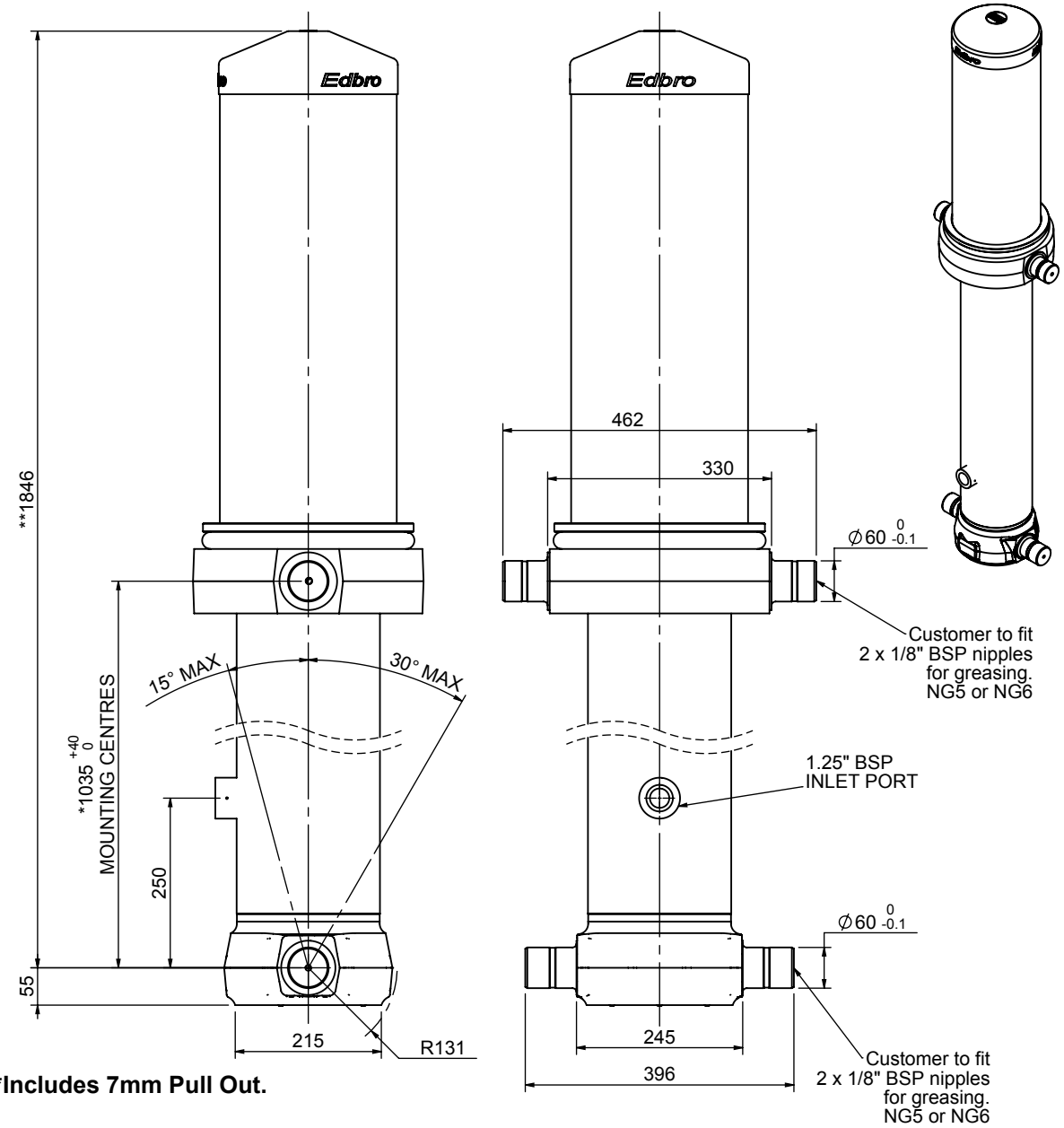

***Includes 7mm Pull Out.**

SPECIFICATION — TIPPING CAPACITY : 34-45 TONNES***

Stage	Diameter	Length	Stroke	Swept Volume
OUTER COVER	261	775	-	-
0	211	1775	-	-
1	188	1740	1520	42
2	167	1740	1537	34
3	147	1740	1547	26
4	127	1740	1562	20
5	105	1740	1567	14
		Total (+5/-10)	7733	136
Final stroke reduced by	0	Priming Volume		25.1
Cylinder Mass (Kg)	349	Total Volume (Litres)		161.1
Maximum Pressure (Bar)	190	Max. first stage thrust		200 KN

***TIPPING CAPACITY AT WORKING PRESSURE

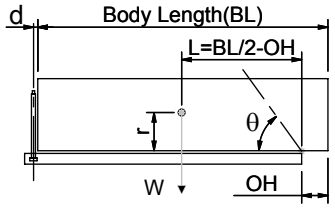

BODY LENGTH (BL)						OH
9000		9500		10000		
37	51°	35	48°	34	46°	150
40	53°	38	50°	36	47°	450
45	55°	41	52°	39	49°	750

Tipping angle (θ)

Body + payload mass,W (tonne)

d = 229; r = 900; Working Pressure 135 bar

For guidance only;
Higher working pressures and tipping capacities may be possible.
To check your application email - applications@edbro.co.uk

NOTES

1. This cylinder is for lifting purposes only and side load conditions should be avoided
2. Cylinder is painted in primer paint to RAL5013
3. Refer to www.edbro.com for;-
   - Bracket details
   - Installation instructions that must be observed
   - Correct oil selection
   - An explanation of tipping capacity

Edbro
SETTING THE INDUSTRY STANDARD

Edbro plc
Nelson Street, Bolton, England, BL3 2JJ
Tel +44 (0) 1204 528888 Fax +44 (0) 1204 531957
Email: postmaster@edbro.com Web: www.edbro.com

Technical Specifications are subject to change without notice

Date Created/Updated: 14 November 2014

Refer www.edbro.com to confirm latest specification
All dimensions are in 'mm', unless otherwise stated

Cylinder Outline Drawing

CS18L057733B25A15

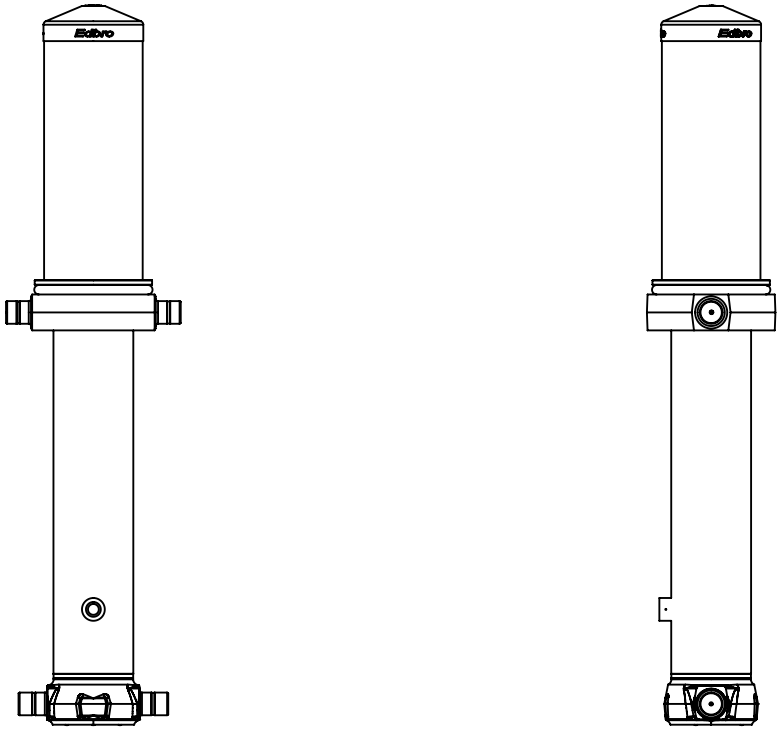

CS18L057733B25A15

Edbro plc
Nelson Street, Bolton, Lancashire BL3 2JJ UK
Tel +44 (0) 1204 528888 Fax +44 (0) 1204 531957
Email: postmaster@edbro.com Web: www.edbro.com

SETTING THE INDUSTRY STANDARD

Technical Specifications are subject to change without notice

Date Created/Updated: 14 November 2014

Scale: 1:20