Cylinder 5 stage front end with plain eye

CS18LE58233B19A02

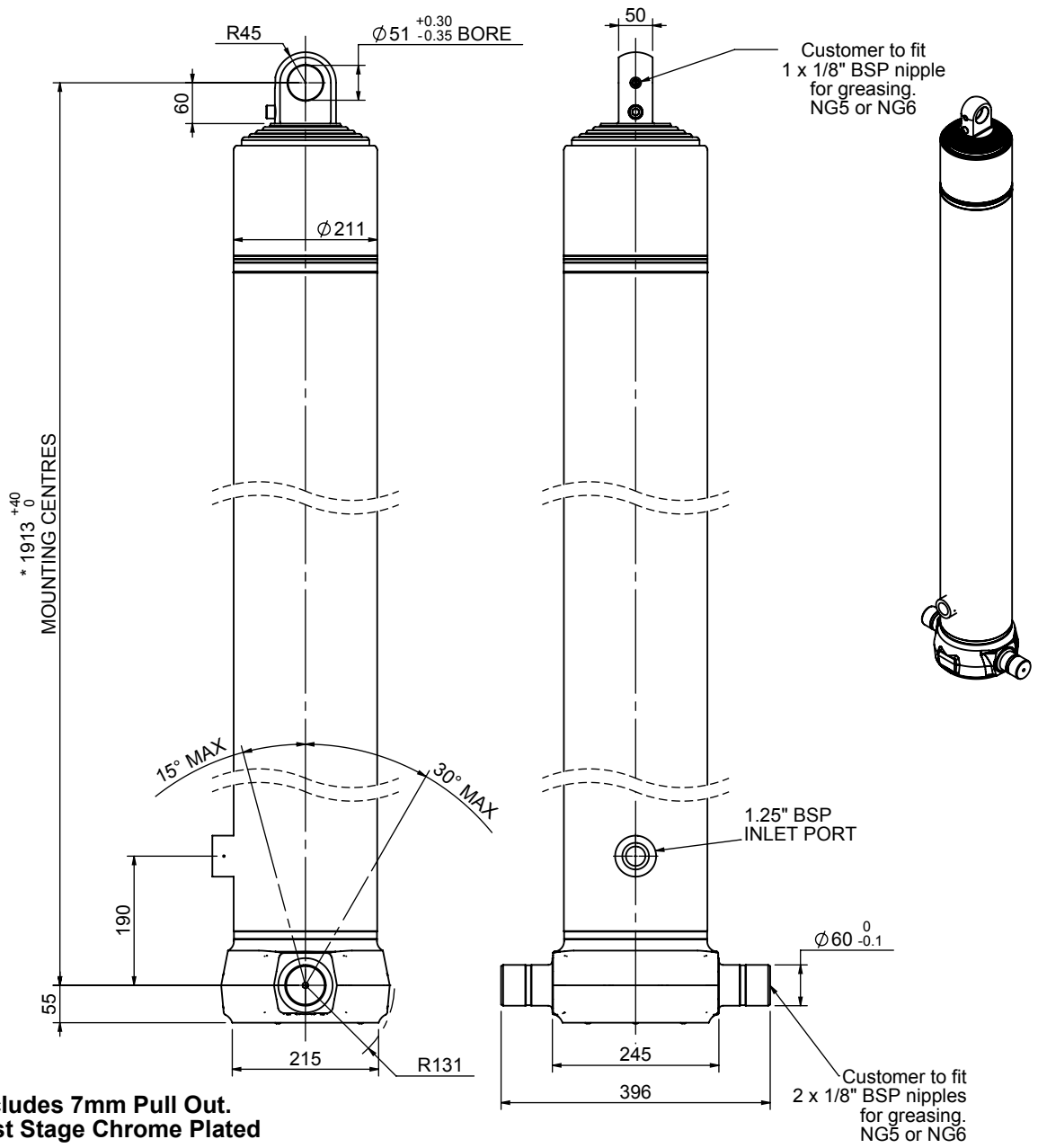

***Includes 7mm Pull Out.**
Last Stage Chrome Plated

SPECIFICATION — TIPPING CAPACITY : 26-33 TONNES***

Stage	Diameter	Length	Stroke	Swept Volume
-	-	-	-	-
0	211	1875	-	-
1	188	1840	1620	45
2	167	1840	1637	36
3	147	1840	1647	28
4	127	1840	1662	21
5	105	1840	1667	14
		Total (+5/-10)	8233	144
Final stroke reduced by	0	Priming Volume		26.7
Cylinder Mass (Kg)	308	Total Volume (Litres)		170.7
Maximum Pressure (Bar)	190	Max. first stage thrust		200 KN

***TIPPING CAPACITY AT WORKING PRESSURE

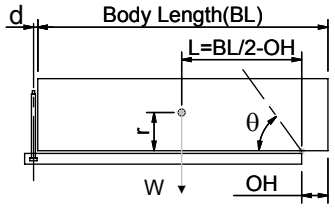

BODY LENGTH (BL)						OH
10000		10500		11000		
28	48°	27	45°	26	43°	150
30	49°	29	47°	27	44°	450
33	51°	31	48°	29	46°	750

Tipping angle (θ)
Body + payload mass,W (tonne)

d = 0; r = 900; Working Pressure 110 bar

For guidance only;
Higher working pressures and tipping capacities may be possible.
To check your application email - applications@edbro.co.uk

NOTES

1. This cylinder is for lifting purposes only and side load conditions should be avoided
2. Cylinder is painted in primer paint to RAL5013
3. Refer to www.edbro.com for;-
   - Bracket details
   - Installation instructions that must be observed
   - Correct oil selection
   - An explanation of tipping capacity

Edbro
SETTING THE INDUSTRY STANDARD

Edbro plc
Nelson Street, Bolton, England, BL3 2JJ
Tel +44 (0) 1204 528888 Fax +44 (0) 1204 531957
Email: postmaster@edbro.com Web: www.edbro.com

Technical Specifications are subject to change without notice

Date Created/Updated: 14 November 2014

Refer www.edbro.com to confirm latest specification
All dimensions are in 'mm', unless otherwise stated

Cylinder Outline Drawing

CS18LE58233B19A02

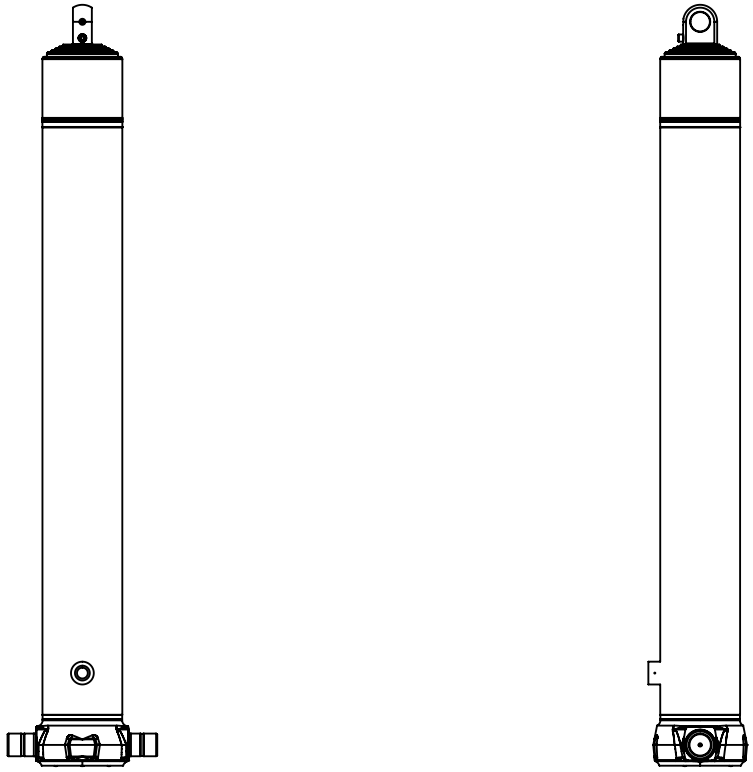

CS18LE58233B19A02

Edbro plc
Nelson Street, Bolton, Lancashire BL3 2JJ UK
Tel +44 (0) 1204 528888 Fax +44 (0) 1204 531957
Email: postmaster@edbro.com Web: www.edbro.com

SETTING THE INDUSTRY STANDARD

Technical Specifications are subject to change without notice

Date Created/Updated: 14 November 2014

Scale: 1:20