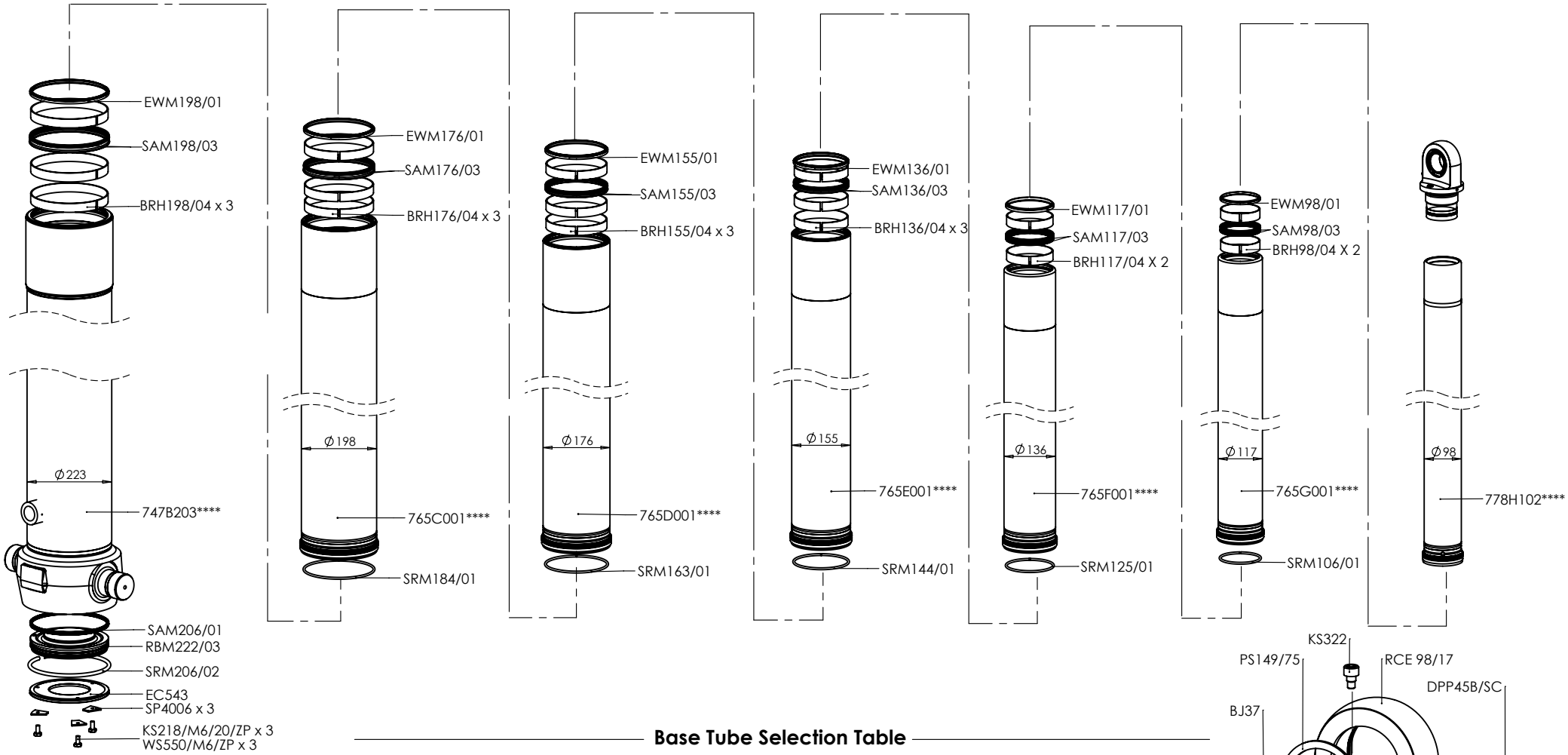


## Base Tube Selection Table

| Mounting Centres | Feed Boss Specification | | | Base TubeAssembly | Mounting Centres | Feed Boss Specification | | | Base Tube Assembly |
|---|---|---|---|---|---|---|---|---|---|
| | Type | Position | Angle | | | Type | Position | Angle | |
| N/A | BSP | 700 | 0 | 747B201**** | N/A | BSP | 250 | 0 | 747B206**** |
| N/A | SAE | 700 | 0 | 747B202**** | N/A | SAE | 250 | 0 | 747B207**** |
| N/A | BSP | 190 | 0 | 747B203**** | N/A | 2XBSP | 250 | 0&45 | 747B208**** |
| N/A | SAE | 190 | 0 | 747B204**** | N/A | BSP | 190 | 90 | 747B209**** |
| N/A | 2XBSP | 190 | 0&45 | 747B205**** | | | | | |

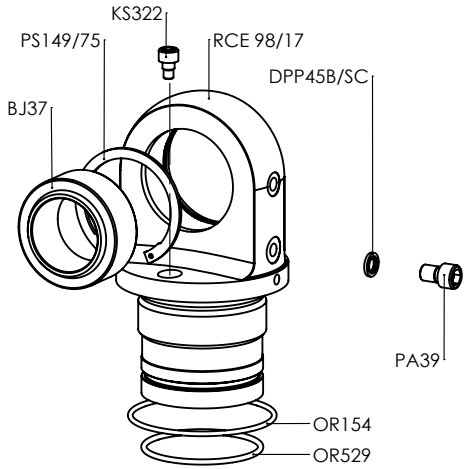


Edbro
SETTING THE INDUSTRY STANDARD

**Seal & bearing ring combined kit available: SKITCS196B**
*(Edbro recommends that bearing rings are replaced with seals)*

# CS190S6****XXX