Cylinder 5 stage front end with outer cover

CS190058928B19A11C

****ALLOW 50mm TO REMOVE CAP FOR SERVICING**

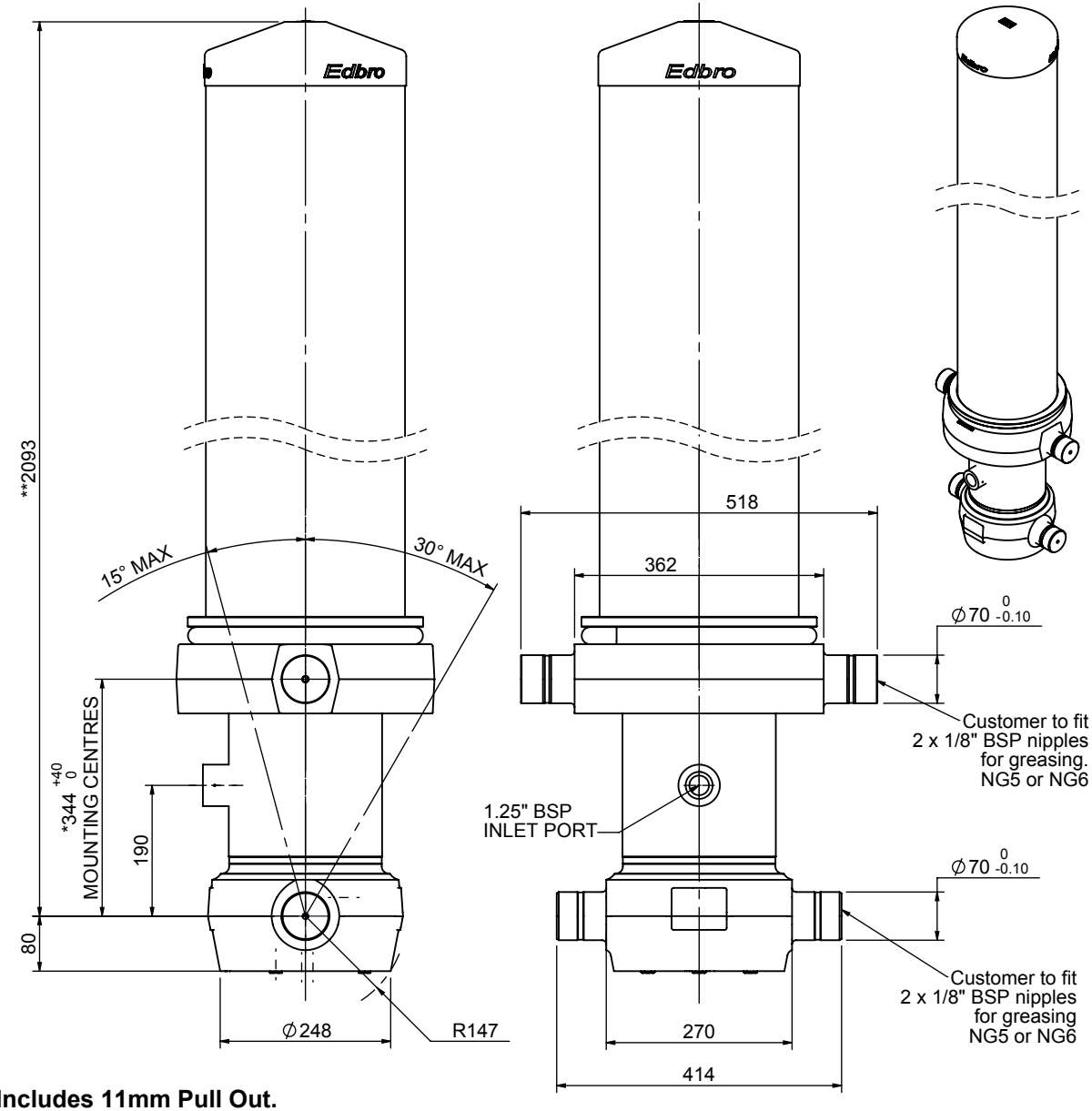

***Includes 11mm Pull Out.**
All Stages Chrome Plated

SPECIFICATION — TIPPING CAPACITY : 37-47 TONNES***

Stage	Diameter	Length	Stroke	Swept Volume
OUTER COVER	289	1685	-	-
0	223	2028	-	-
1	198	1990	1756	54
2	176	1990	1777	43
3	155	1990	1787	34
4	136	1990	1797	26
5	117	1990	1812	19
		Total (+5/-10)	8929	176
Final stroke reduced by	0	Priming Volume		35
Cylinder Mass (Kg)	467	Total Volume (Litres)		211
Maximum Pressure (Bar)	190	Max. first stage thrust		350 KN

***TIPPING CAPACITY AT WORKING PRESSURE

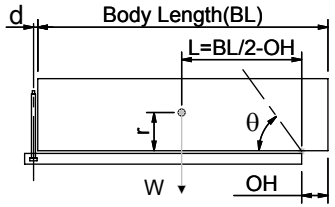

BODY LENGTH (BL)						OH
10250		10750		11250		
40	51°	39	49°	37	47°	150
43	53°	41	50°	39	48°	450
47	55°	44	52°	42	49°	750

Tipping angle (θ)

Body + payload mass,W (tonne)

d = 229; r = 900; Working Pressure 120 bar

For guidance only;
Higher working pressures and tipping capacities may be possible.
To check your application email - applications@edbro.co.uk

NOTES

1. This cylinder is for lifting purposes only and side load conditions should be avoided
2. Cylinder is painted in primer paint to RAL5013
3. Refer to www.edbro.com for;-
   - Bracket details
   - Installation instructions that must be observed
   - Correct oil selection
   - An explanation of tipping capacity

Edbro
SETTING THE INDUSTRY STANDARD

Edbro plc
Nelson Street, Bolton, England, BL3 2JJ
Tel +44 (0) 1204 528888 Fax +44 (0) 1204 531957
Email: postmaster@edbro.com Web: www.edbro.com

Technical Specifications are subject to change without notice

Date Created/Updated: 27 May 2014

Refer www.edbro.com to confirm latest specification
All dimensions are in 'mm', unless otherwise stated

Cylinder Outline Drawing

CS190058928B19A11C

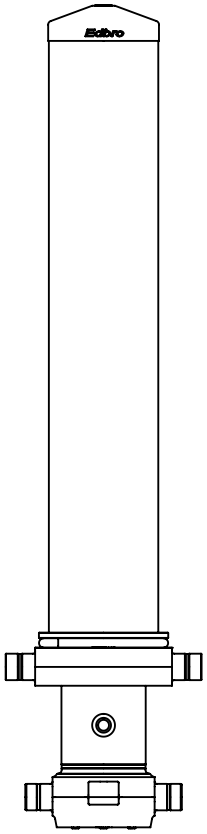

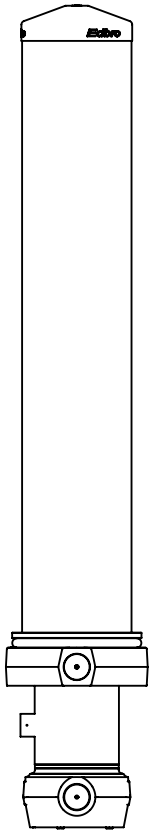

CS190058928B19A11C

SETTING THE INDUSTRY STANDARD

Edbro plc
Nelson Street, Bolton, Lancashire BL3 2JJ UK
Tel +44 (0) 1204 528888 Fax +44 (0) 1204 531957
Email: postmaster@edbro.com Web: www.edbro.com

Technical Specifications are subject to change without notice

Date Created/Updated: 27 May 2014

Scale: 1:20