DRAWN	T.M	DATE	03-12-15	PART NO.	CX1100303194B507	TITLE	**CYLINDER OUTLINE**	DRG SIZE **A4**	PROJECT NAME OPTIMUM
CHECK	T.M	DATE	03-12-15	DRG NO.	**4A78961_2894**	DRG ISSUE	_	PAGE NO. **1**	FAMILY NAME FAMILY

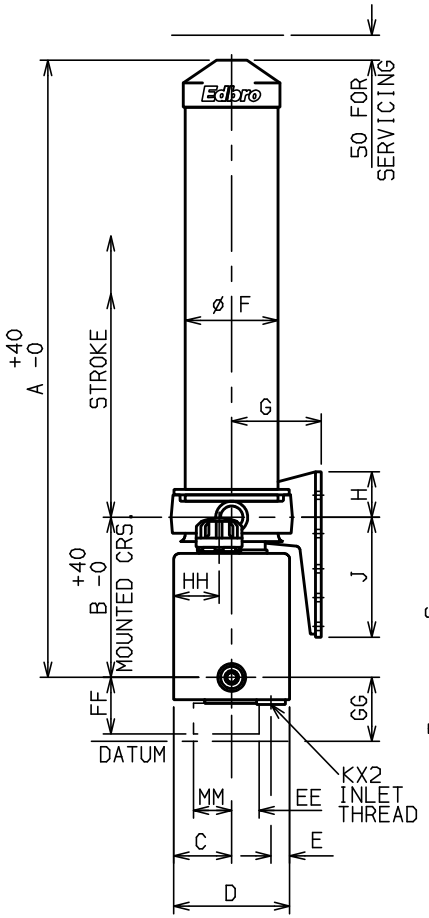

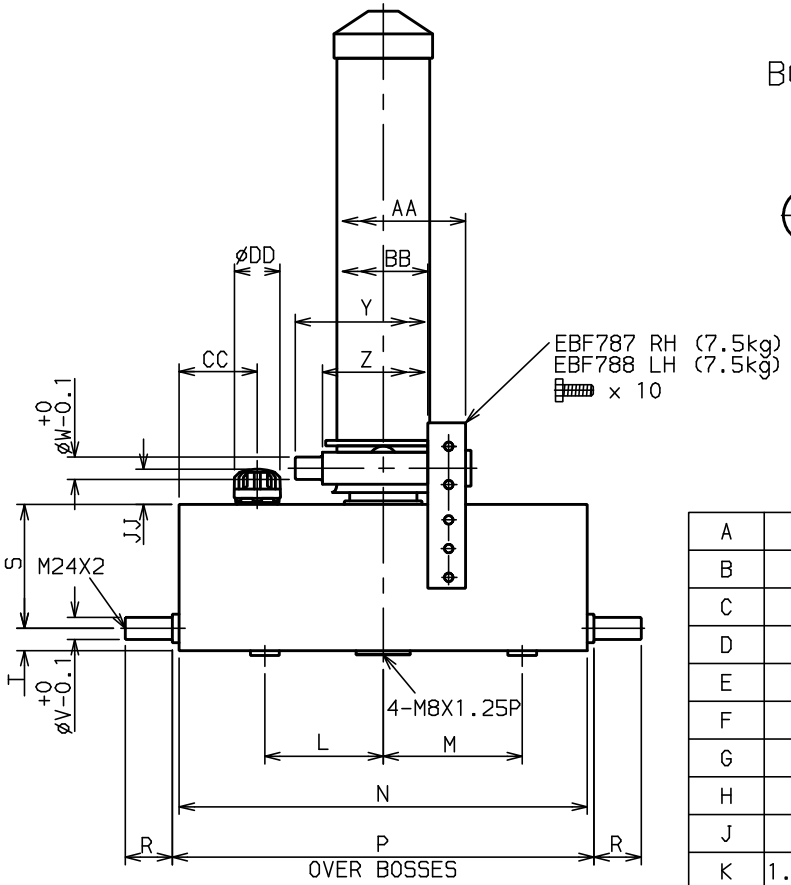

BOLT HOLE PATTERN

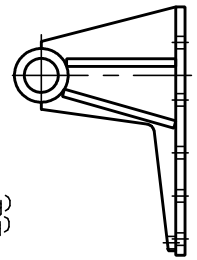

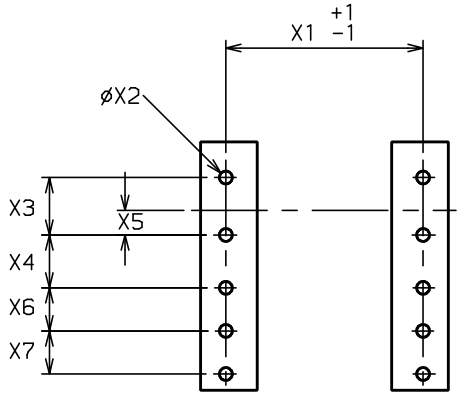

ISO BS3643 DIN 931 Gr8,8

M16 240Nm ø17xø30

A	1359
B	318
C	115
D	230
E	38
F	184
G	178
H	90
J	238
K	1.25"BSP
L	235
M	300
N	810
P	837
R	94
S	246
T	44
V	44.45
W	44.45
Y	349

Z	241
AA	327
BB	177
CC	155
DD	92
EE	54
FF	112
GG	127
HH	90
JJ	70
MM	76
X1	260
X2	17
X3	76
X4	70
X5	32
X6	57
X7	57

EXT	BORE	O.DIA	LENGTH	STROKE	THRUST AT 135 bar
O/C	177.80	184.15	1028		
0	124.85	135.75	1220		
1	105.97	116.65	1240	1055	14.70 t
2	87.45	97.80	1240	1067	10.33 t
3	71.00	79.30	1240	772	6.79 t
			TOTAL	2894	

BODY LENGTH

3500	3750	4000	4250	4500	4750	5000	O/HANG
16 54°	16 51°	16 47°	16 44°				150
	16 53°	16 49°	16 46°				300
		16 51°	16 48°	16 45°			450
		16 54°	16 50°	16 47°	16 44°		600
			16 52°	16 48°	16 45°		750
W *			16 54°	16 51°	16 47°	16 44°	900

SWEPT VOLUME	25 l
TOTAL VOLUME	29 l
OIL TANK CAPACITY	38 l
OPERATING PRESSURE	135 bar
MAXIMUM PRESSURE	150 bar
CYLINDER WEIGHT DRY	166 kg

DATE 03 DEC 15

W = BODY WEIGHT + PAYLOAD (t) α = ANGLE OF TIP (°)

Edbro THE INDUSTRY STANDARD

MAX LOAD	16 tonne

DIMENSIONS IN MILLIMETRES UNLESS STATED OTHERWISE

CYLINDER ASSEMBLY	CX1100303194B507