Cylinder 4 stage front end with outer cover

CX1100403271B101

****ALLOW 50mm TO REMOVE CAP FOR SERVICING**

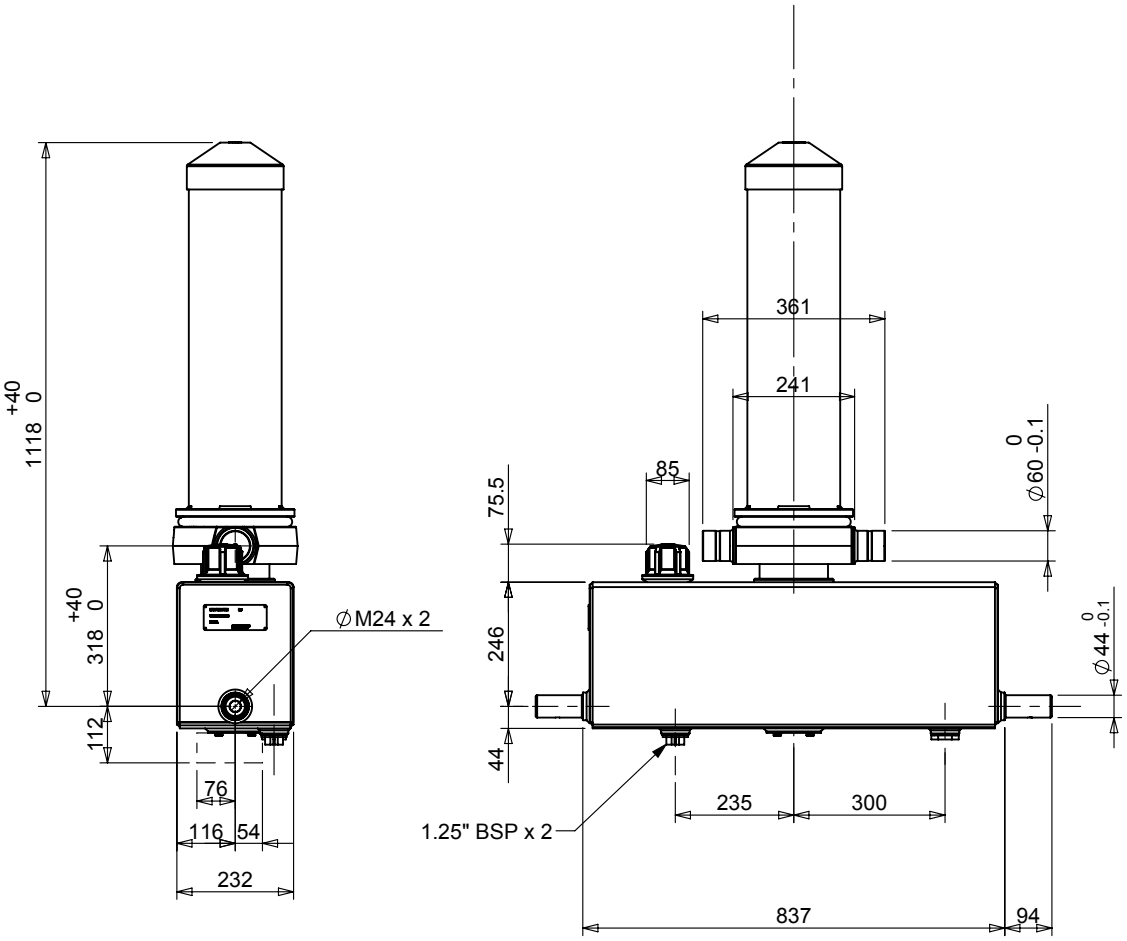

***Includes 14mm Pull Out.**

SPECIFICATION		TIPPING CAPACITY : 13-27 TONNES***		
Stage	Diameter	Length	Stroke	Swept Volume
OUTER COVER	184	745	-	-
0	136	970	-	-
1	117	990	801	9
2	98	990	817	6
3	79	990	822	4
4	63	990	827	3
		Total (+5/-10)	3267	22
Final stroke reduced by	0	Priming Volume		6.3
Cylinder Mass (Kg)	164	Total Volume (Litres)		28.3
Maximum Pressure (Bar)	150	Oil Tank Capacity (L)		38

***TIPPING CAPACITY AT WORKING PRESSURE

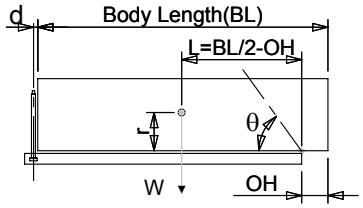

BODY LENGTH (BL)						OH
3500		4250		5000		
21	55°	15	45°	13	38°	150
		19	48°	14	40°	450
		27	53°	18	43°	750

Tipping angle (θ)

Body + payload mass,W (tonne)

d = 0; r = 900; Working Pressure 135 bar

For guidance only;
Higher working pressures and tipping capacities may be possible.
To check your application email - applications@edbro.co.uk

NOTES

1. This cylinder is for lifting purposes only and side load conditions should be avoided
2. Cylinder is painted in primer paint to RAL5013
3. Refer to www.edbro.com for;-
   - Bracket details
   - Installation instructions that must be observed
   - Correct oil selection
   - An explanation of tipping capacity

Edbro
SETTING THE INDUSTRY STANDARD

Edbro plc
Nelson Street, Bolton, England, BL3 2JJ
Tel +44 (0) 1204 528888 Fax +44 (0) 1204 531957
Email: postmaster@edbro.com Web: www.edbro.com

Technical Specifications are subject to change without notice

Date Created/Updated: 05 July 2016

Refer www.edbro.com to confirm latest specification
All dimensions are in 'mm', unless otherwise stated