UB Series: *Underbody Cylinder*

UB240M802770

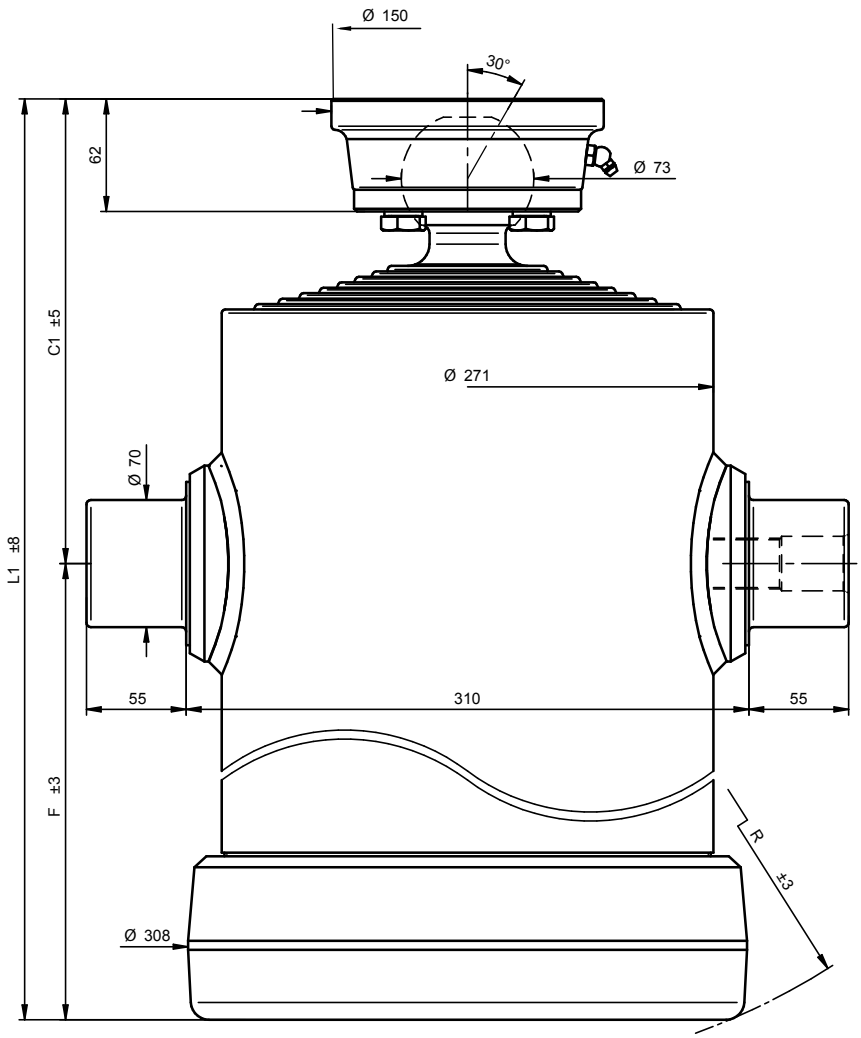

C¹	255
F	342
L¹	597
R	375

Dims in mm

Description:	UB240M802770
Max stroke:	2770 mm
Max pressure:	180 bar
Oil volume:	57 litres
Weight:	202 kg
Tube dimensions:	88 - 107 - 126 - 145 - 165 - 187 - 210 - 236
Tube length:	450 mm
Tube surface treatment:	TPQ or Tenifer + Chromed

Edbro
Member of JOST-World

JOST UK Ltd
Edbro house, Nelson Street, Bolton, Lancashire, BL3 2JJ, UK
Tel: +44 (0) 120 4528888 Fax: +44 (0) 120 4531957
Web : www.edbro.com Email: sales@edbro.com

Technical specifications are subject to change without notice.

Rev 1, Nov 2015