Edbro

BOLTON - ENGLAND

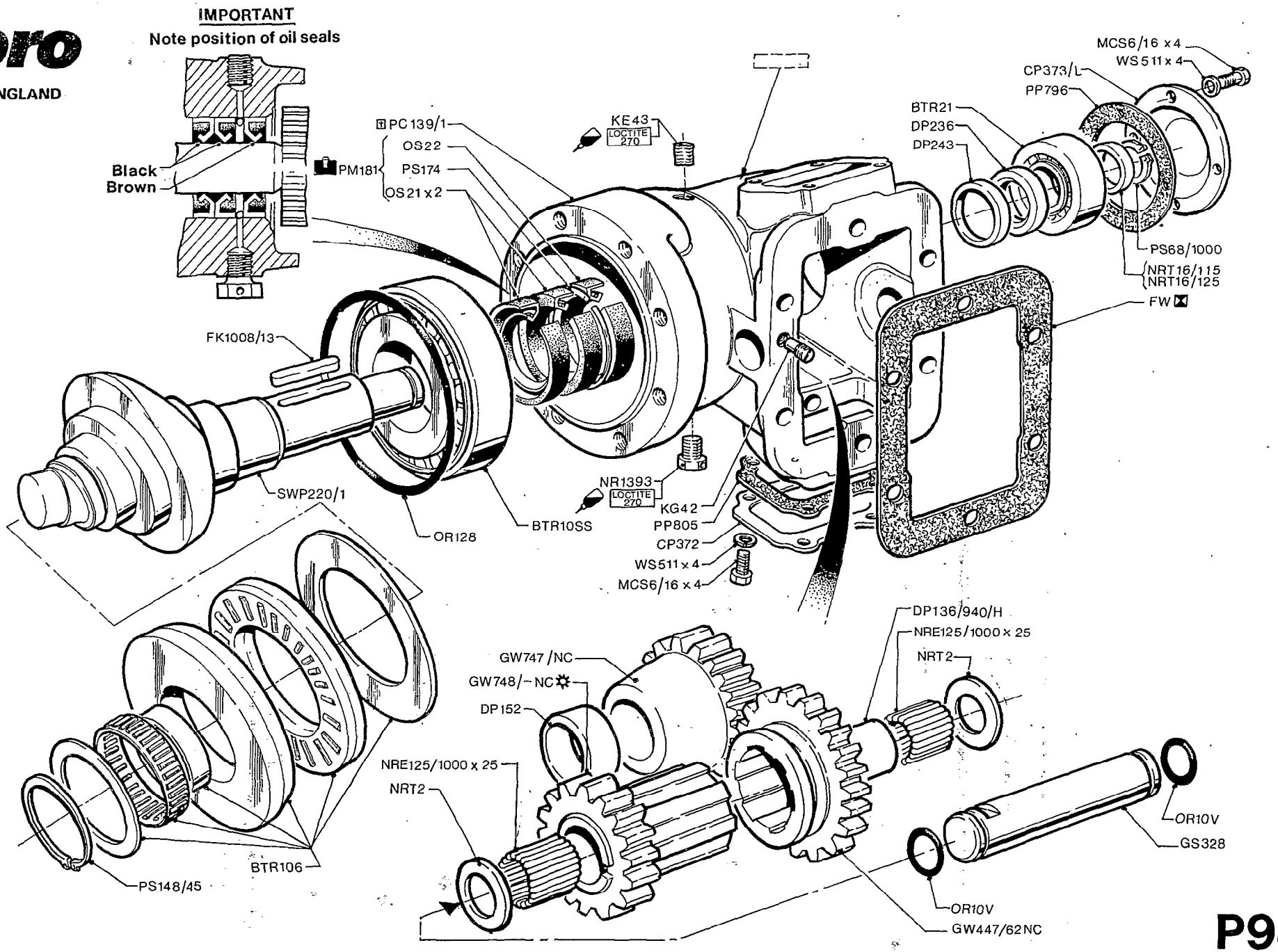

EDBRO-88

P989